ANYLOAD®

A1A-DM2507C
A1A-DM2508C

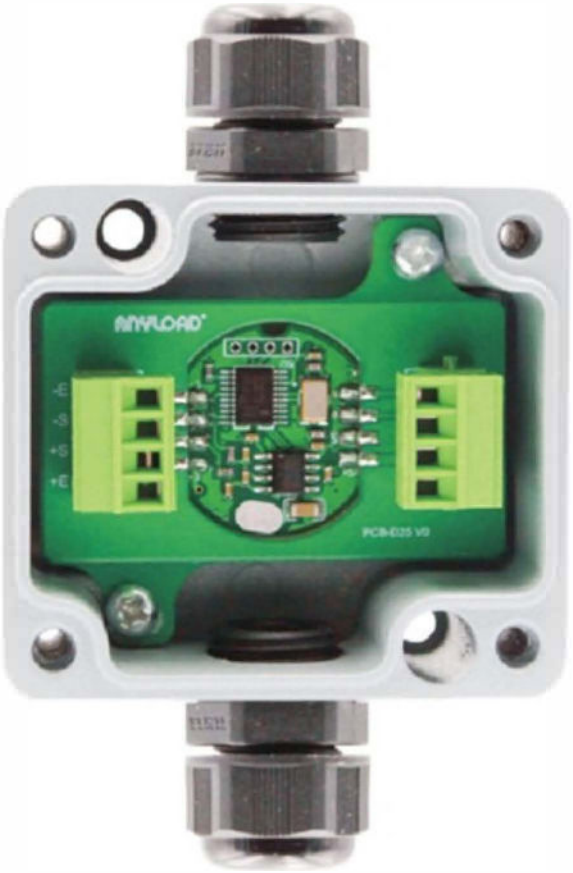

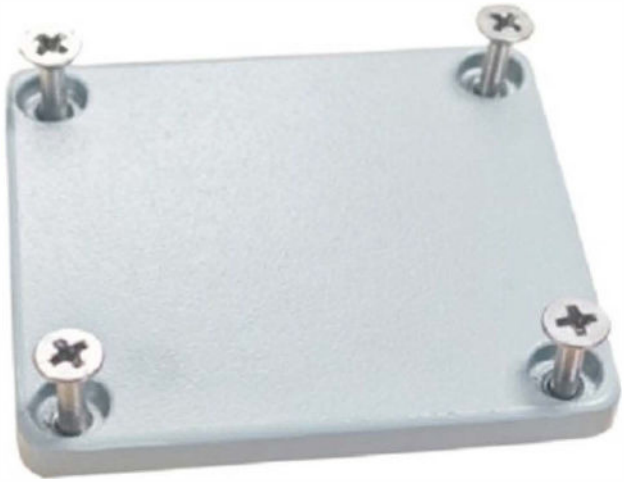

1-855-269-5623
www.anyload.com

PN-250606

TECHNICAL MANUAL

V1.0.0

© ANYLOAD Weigh & Measure Inc. All rights reserved.

ANYLOAD® is a registered trademark of ANYLOAD Weigh & Measure Inc.
All other brand or product names mentioned in this document are trademarks or registered trademarks of their respective owners.

All information contained in this document is, to the best of our knowledge, complete and accurate at the time of publication. ANYLOAD Weigh & Measure Inc. reserves the right to make changes to the technology, features, specifications, and design of its equipment without prior notice.

The most current version of this document, along with any software, firmware, and other product updates, can be found on our website:

www.anyload.com

Legal Notice

ANYLOAD products are subject to our **Standard Terms and Conditions of Sale**, **Warranty Policy**, and applicable regulatory compliance requirements as they may be updated without notice. It is the user's responsibility to ensure proper installation, operation, and maintenance of the equipment as outlined in this manual and in accordance with all relevant laws and standards.

ANYLOAD Weigh & Measure Inc. disclaims all warranties not expressly stated in the Warranty Policy, including but not limited to implied warranties of merchantability and fitness for a particular purpose. ANYLOAD shall not be liable for any direct, indirect, incidental, or consequential damages arising from the use or inability to use this equipment.

CONTENTS

CONTENTS 1
1. Introduction 3
1.1 Features 3
1.2 Safety 3
2. Connection Diagram 5
3. Installation 5
3.1 Connecting Power and Signal Wires 5
3.2 Securing the Board 5
4. Communication Protocol 6
4.1 Communication Examples 7
4.1.1 Reading Measurement Value 7
4.1.2 Setting Transmitter Device Address 8
4.1.3 Tare Weight 8
4.1.4 Zero Setting 8
5. Calibration 8
6. Operation 9
7. Compliance 9
8. Technical Specifications 10
8.1 Drawings & Dimensions 10
8.2 Specifications Table 11

©06/2025 ANYLOAD. *Content subject to change without notice.*

Revision History:

Record with brief description of all revisions made to product or manual

Version	Date	Description
1.0.0	June 6th, 2025	First public release version.

The most current version of this document, along with any software, firmware, and other product updates, can be found on our website:

www.anyload.com

©06/2025 ANYLOAD. *Content subject to change without notice.*

1. Introduction

This manual provides information on installation, configuration, calibration and servicing of the A1A-DM2507C/DM2508C Load Cell Amplifier.

For questions regarding this manual or the operation of ANYLOAD products, please contact your authorized ANYLOAD distributor or visit our website at www.anyload.com for support resources and service information.

1.1 Features

- Digital output options for RS-232 (A1A-DM2507C) or RS-485 MODBUS RTU (A1A-DM2508C)
- 24-bit A/D converter, high speed processor
- Sensor input range: 0.8~3.9mV/V
- Reverse polarity protection

1.2 Safety

READ this manual BEFORE operating or servicing this equipment or systems with this equipment incorporated.

FOLLOW these instructions carefully.

DO NOT allow untrained personnel to operate, clean, inspect, maintain, service, or modify this equipment.

SAVE and distribute this manual for future reference.

Failure to follow the instructions or heed the warnings could result in injury or death. Contact any ANYLOAD dealer or distributor for replacement manuals.

Indicative Markings:

Symbol	Significance
⚠ WARNING ⚠	Warns of a potentially dangerous situation which can result in serious physical injury or death
⚠ CAUTION	Warns of a potentially dangerous situation which can result in slight or moderate physical injury
Notice	Failure to comply to information with this marking may lead to damage to property
⚑ Important	Important information about the product
ⓘ Tip	Application tips and other information that may be helpful
For emphasis (Italics)	Italics are used to emphasize key information

©06/2025 ANYLOAD. *Content subject to change without notice.*

General Safety:

⚠ WARNING ⚠

ONLY qualified professionals approved should carry out intrinsically safe installations. This work involves extensive knowledge of the product, specific safety standards, and the potentially hazardous environment in which it will be operating.

- Do not allow minors or inexperienced individuals to operate this unit.
- Ensure the unit is fully assembled before operation.
- Keep hands and fingers away from slots, openings, or any potential pinch points.
- Do not use this product if any component appears cracked or damaged.
- Avoid making alterations or modifications to the unit.
- Do not remove or obscure any warning labels.
- Do not submerge the unit in water.
- Before opening the unit, ensure the power cord is disconnected from the power source. Disconnect all power sources before servicing, as multiple power sources may be present. Failure to do so may result in property damage, personal injury, or death.
- For permanently connected equipment, incorporate a readily accessible disconnect device in the building's installation wiring.
- Pluggable units must be installed near an easily accessible socket/outlet.
- Use only copper or copper-clad aluminum conductors when wiring.

Recommendations for Proper Use:

- Keep the instrument away from heat sources and direct sunlight.
- Protect the instrument from rain unless it is a special IP-rated version.
- Do not clean with water jets unless specified for IP-rated models.
- Avoid dipping the instrument in water or spilling liquids on it.
- Use a soft, dry cloth for cleaning; do not use solvents or abrasive materials.
- Do not install the unit in areas with explosion hazards unless with specially rated models.
- If the working environment reaches the unit's temperature limits, ensure proper airflow around the instrument to prevent malfunctions such as sudden shutdowns or disconnections.

Disposal Guidelines:



Product Disposal: Dispose of this product at authorized waste collection centers at the end of its life cycle. Proper disposal prevents environmental and health risks and supports recycling. Illegal disposal may result in legal penalties.

Battery Disposal: Dispose of batteries at designated centers as per local laws. Batteries may contain harmful substances (e.g., Cd, Li, Hg, Pb) and must not be discarded with household waste. Improper disposal may result in legal penalties.

©06/2025 ANYLOAD. *Content subject to change without notice.*

2. Connection Diagram

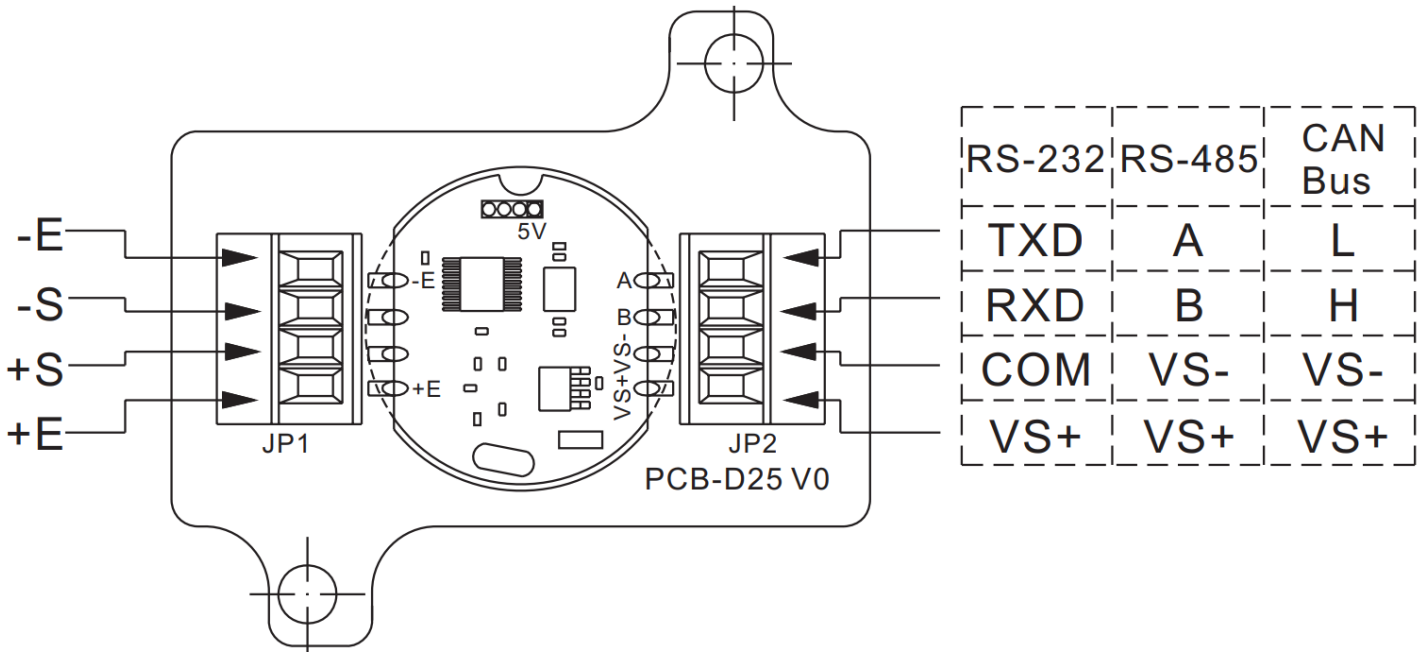

Figure 2-1: Connection Diagram for A1A-DM2507C/(2508C)

3. Installation

3.1 Connecting Power and Signal Wires

Connecting the power, output signal, and load cell to the amplifier can be accomplished with a small flat head screwdriver.

1. Loosen the terminals far enough that the lower section of the terminal clamp is visible.
2. Insert the loose, stripped wire into the terminal, ensure the wire remains near the top of the terminal hole.
3. Once the terminal is tightened, lightly check that the wires are clamped correctly and will not fall out of the terminal.

   Note: If a wire is not clamped correctly, loosen the terminal again, and ensure the wire is inserted properly into the clamp assembly before tightening.

3.2 Securing the Board

The board includes two holes for M3 or 1/8" screws to secure it. Ensure that the board is being installed on appropriate height standoffs to provide adequate space for solder joints and components underneath the board once the assembly is fastened properly.

⚠ CAUTION

Care must be taken when tightening the screws to not overtighten them as this can result in cracking or breaking the PCB.

©06/2025 ANYLOAD. *Content subject to change without notice.*

4. Communication Protocol

Table 4-1: Modbus RTU Parameters and Holding Registers (MSB First)

Parameter	Holding register (HEX)	Modbus Register (Decimal)	Operation Mode	Range	Note
Measuring Value	0000 & 0001	40001 & 40002	R/W	Int32	Write to TARE or preset
Station id	0002 & 0003	40003 & 40004	R/W	1 to 254	0 reserved for broadcast
Offset Value	0004 & 0005	40005 & 40006	R/W	Int32	
Cal. Points num	0006 & 0007	40007 & 40008	R/W	2 to 9	# of calibration points, >2 for linearization
AVP1	0008 & 0009	40009 & 40010	R/W	Int32	#1 point AD input value
AVP2	000A & 000B	40011 & 40012	R/W	int32	#2 point AD input value
AVP3	000C & 000D	40013 & 40014	R/W	int32	#3 point AD input value
AVP4	000E & 000F	40015 & 40016	R/W	int32	#4 point AD input value
AVP5	0010 & 0011	40017 & 40018	R/W	int32	#5 point AD input value
AVP6	0012 & 0013	40019 & 40020	R/W	int32	#6 point AD input value
AVP7	0014 & 0015	40021 & 40022	R/W	int32	#7 point AD input value
AVP8	0016 & 0017	40023 & 40024	R/W	int32	#8 point AD input value
AVP9	0018 & 0019	40025 & 40026	R/W	int32	#9 point AD input value
PVP1	001A & 001B	40027 & 40028	R/W	int32	#1 point output value
PVP2	001C & 001D	40029 & 40030	R/W	int32	#2 point output value
PVP3	001E & 001F	40031 & 40032	R/W	int32	#3 point output value
PVP4	0020 & 0021	40033 & 40034	R/W	int32	#4 point output value
PVP5	0022 & 0023	40035 & 40036	R/W	int32	#5 point output value
PVP6	0024 & 0025	40037 & 40038	R/W	int32	#6 point output value
PVP7	0026 & 0027	40039 & 40040	R/W	int32	#7 point output value
PVP8	0028 & 0029	40041 & 40042	R/W	int32	#8 point output value
PVP9	002A & 002B	40043 & 40044	R/W	int32	#9 point output value
ADC Speed	0034 & 0035	40053 & 40054	R/W	0/1	10/ 40 SPS
Filter Level	0056 & 0057	40087 & 40088	R/W	0 to 5	Bigger for stable but more delay
Filter Band	0058 & 0059	40089 & 40090	R/W	0 to 1000	Filter effective band
Baud Rate	005A & 005B	40091 & 40092	R/W	0 to 10	300 to 115200bps, Table 2
Zero Trace Delay	005C & 005D	40093 & 40094	R/W	0 to 50	Times 100ms
Zero Trace Band	005E & 005F	40095 & 40096	R/W	0 to 10000	Zero trace effective band
Stable Judgment Delay Time	0060 & 0061	40097 & 40098	R/W	1 to 50	Times 100ms
Stable Judgment Band	0062 & 0063	40099 & 40100	R/W	1 to 100	Times 1/2 output digits
Output Round	0064 & 0065	40101 & 40102	R/W	1 to 250	
Parity	0066 & 0067	40103 & 40104	R/W	0 to 4	Table 3
AD value	1F40 & 1F41	48001 & 48002	R	int32	ADC raw value

©06/2025 ANYLOAD. *Content subject to change without notice.*

Default settings:

- Baud rate: 9600bps (configurable)
- Start bit: 1
- Data bits: 8
- Parity: none (configurable)
- Stop bit: 1
- Station ID: 1 (1-254 available, 0 is reserved for broadcast)

Table 4-2: Baud Rate

Value	Baud rate (bps)
0	300
1	600
2	1200
3	2400
4	4800
5	9600
6	19200
7	28800
8	38400
9	57600
10	115200

Table 4-3: Parity

Value	Parity
0	None
1	Odd
2	Even
3	MARK
4	SPACE

4.1 Communication Examples

4.1.1 Reading Measurement Value

Using Function Code (FC) 03, read the holding register. Measured values are stored in registers 0000-0001 (40001-40002) using a 32 bit signed integer value.

Note: The measured value register does not have support for decimal values so the conversion must be done manually. The value will be based on the resolution set during calibration. For example, an 800kg weight will read 800 000 if the resolution is set in grams (g).

©06/2025 ANYLOAD. *Content subject to change without notice.*

Host sends: 01 03 00 00 00 02 C4 0B *(Device address: 01, function code: 03, register address: 0000, register number: 02, CRC 16 bits: C4 0B)*

Transmitter responds: 01 03 04 00 01 05 E2 28 EA *(Device address: 01, function code: 03, data bytes: 4, measurement data: [00 01 05 E2] (equal to 67 042 in decimal, CRC 16 bits: 28 EA*

4.1.2 Setting Transmitter Device Address

Using FC10, the original station ID can be changed from 01 in register 0002-0003 (40003-40004). As an example, here's how to change the station ID to 10.

Host sends: 01 10 00 02 00 02 04 00 00 00 0A F2 71 *(Device address: 01, function code: 10, register address: 0002, register number: 02, data bytes: 04, new station ID: [00 00 00 0A] (equal to 10 in decimal), CRC 16 bits: F2 71)*

Transmitter responds: 01 10 00 02 00 02 E0 08 *(Device address: 01, function code: 10, register address: 0002, register number: 02, CRC 16 bits: E0 08*

4.1.3 Tare Weight

Using FC10, write 0 to the measure value register directly. This operation writes to volatile memory and is cleared when the unit is powered off.

Host sends: 01 10 00 00 00 02 04 00 00 00 00 F3 AF *(Device address: 01, function code: 10, register address: 0000, register number: 02, data bytes: 04, tare data: 00 00 00 00, CRC 16 bits: F3 AF)*

Transmitter responds: 01 10 00 00 00 02 41 C8 *(Device address: 01, function code: 10, register address: 0000, register number: 02, CRC 16 bits: 41 C8)*

4.1.4 Zero Setting

Read the current measuring values in registers 0000-0001 and current offset values in registers 0004-0005, then calculate a new offset value by adding the existing offset to the measured value.

Write the new value into the offset registers 0004-0005.

⚠ CAUTION

This is a non-volatile operation and should not be performed frequently to preserve chip memory, use of the tare function is strongly recommended

©06/2025 ANYLOAD. *Content subject to change without notice.*

5. Calibration

Perform calibration via Modbus RTU protocol by performing the following:

1. With no load applied, read the AD values (register 1F40 & 1F41) 32 times and take the average.
2. Write the average to AVP1 (0008 & 0009) and write 0 to PVP1 (001A & 001B).
3. With a known load applied, read the AD values (register 1F40 & 1F41) 32 times again and take the average.
4. Write the result to AVP2 (000A & 000B) and write the load value to PVP2 (001C & 001D).
5. Select a resolution by writing an appropriate value to PVP2

   Ex. Applying a 10kg load, writing a value of 10 000 to PVP2 will get a resolution of 10/10 000 = 0.001kg (1g), writing a value of 1000 will get a resolution of of 10/1000 = 0.01kg (10g), etc.
6. Write 2 to calibration point number (register 0006 & 0007) to complete calibration.
7. For additional calibration points, repeat steps 3-6 using the additional calibration registers.

6. Operation

- The amplifier is not IP rated and must be kept away from water or debris ingress as these can significantly affect the output or render the amplifier inoperable. An enclosure is strongly recommended.
- For the most stable amplifier readouts, a stable and reliable DC power supply should be used.
- The load cell cable should be run through areas free of electrical and magnetic fields as the load cell must be able to transmit signal differences of a few μV to the amplifier, these fields can induce interference voltages.

©06/2025 ANYLOAD. *Content subject to change without notice.*

7. Technical Specifications

7.1 Drawings & Dimensions

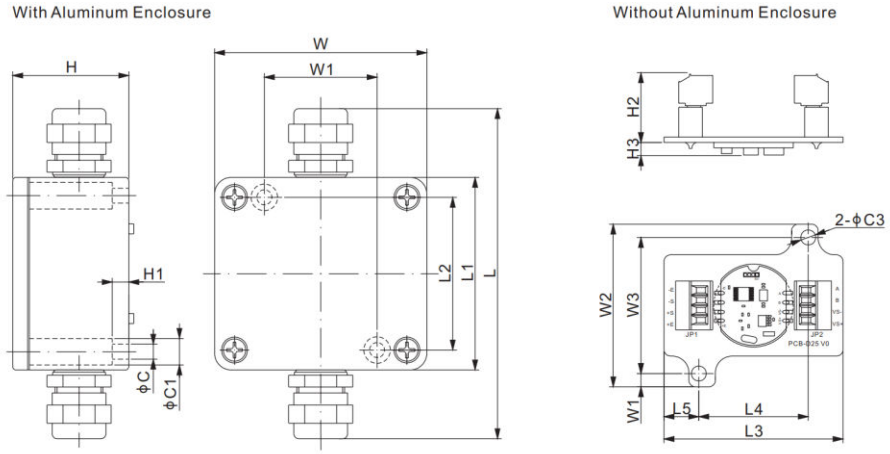

DIMENSIONS

	C	C1	H	H1	L	L1	L2	W	W1	C3	H2	H3	L3	L4	L5	W2	W3	W4
inches	0.18	0.33	1.38	0.20	3.94	2.28	1.81	2.52	1.34	0.18	0.83	0.16	2.13	1.30	0.41	1.93	1.61	0.16
mm	4.5	8.5	35.0	5.0	100.0	58.0	46.0	64.0	34.0	4.5	21.0	4.0	54.0	33.0	10.5	49.0	41.0	4.0

Figure 7-1: Chip Dimensions

7.2 Specifications Table

Table 7-1: Product Specifications

	A1A-DM2507C	A1A-DM2508C
Acceptable Load Cell Type	All strain gauge type	
Weight Approx. (g)	150	
Power Supply	9~24VDC	
Working Temperature	-22°F – 122°F / -30°C – 50°C	
Output signal	RS-232	RS-485
Output protocol	Modbus RTU	
Non-linearity	<0.01%	
Input range	0.8-3.9mV/V	
Power consumption	0.36W @ 12V	
Load cell excitation voltage	5V	

⚑ Important

Specifications are subject to change *without* notice. Users are encouraged to refer to our website or confirm with our team any details, questions, or concerns.

©06/2025 ANYLOAD. *Content subject to change without notice.*

Please **Contact Our Authorized Dealer** for Technical Assistance:

Notes:

V1.0.0
PN-250606

1-855-269-5623
www.anyload.com

© 2025 Anyload Weigh & Measure Inc.
Specifications subject to change without notice.