563WS; 563WS30

ANYLOAD

Stainless Steel

563WS; 563WS30
563WS30-CG,
563WS30-E:

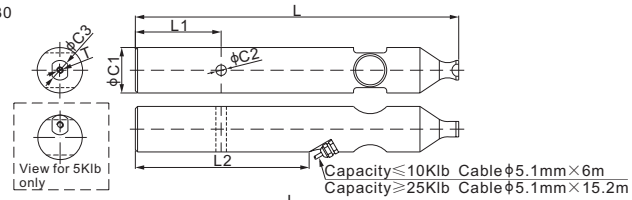

563WS30-50Klb,
563WS30-H:

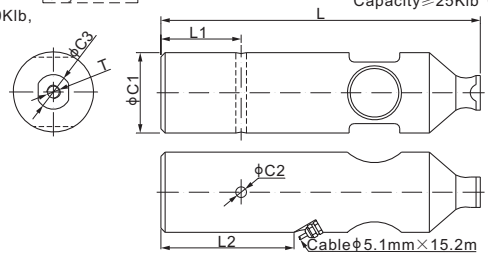

RoHS

*: Input 3.0mV/V only

DIMENSIONS

RATED CAPACITY	C1		C2		C3		L		L1		L2		T
563WS:													
lb	**inch**	**mm**	**inch**	**mm**	**inch**	**mm**	**inch**	**mm**	**inch**	**mm**	**inch**	**mm**	
1,250	1.25	31.8	0.31	7.9	0.63	16.0	11.50	292.1	3.00	76.2	6.04	153.5	#8-32
2,500	1.62	41.1	0.37	9.4	0.70	17.8	11.50	292.1	3.00	76.2	5.59	142.0	#6-32
5,000	2.00	50.8	0.37	9.4	0.88	22.4	10.88	276.4	3.05	77.5	3.83	97.4	#8-32
10,000	2.50	63.5	0.37	9.4	0.88	22.4	12.63	320.8	3.05	77.5	4.20	106.9	#8-32
25,000	3.50	88.9	0.50	12.7	1.75	44.5	14.88	378.0	3.05	77.5	5.04	128.0	5/16-18 UNC-2B
25,000 (-CG)	3.50	88.8	0.50	12.7	1.76	44.7	14.88	378.0	3.66	93.1	7.64	194.1	5/16-18 UNC-2B
563WS30:													
lb													
37,500	3.50	88.9	0.50	12.7	1.75	44.5	14.88	378.0	3.05	77.5	5.04	128.0	5/16-18 UNC-2B
37,500 (-CG)	3.50	88.8	0.50	12.7	1.76	44.7	14.88	378.0	3.66	93.1	7.64	194.1	5/16-18 UNC-2B
50,000	3.74	95.0	0.50	12.7	1.61	40.9	14.88	378.0	3.74	95.0	7.05	179.0	5/8-16 UNC-2B
50,000 (-E)	3.50	88.9	0.50	12.7	1.73	44.0	14.88	378.0	3.51	89.1	7.76	197.0	5/16-24 UNF-2B
50,000 (-H)	3.74	95.0	0.51	12.9	1.75	44.5	14.88	378.0	3.63	92.1	7.76	197.0	5/16-24 UNF-2B

563WS30-F:

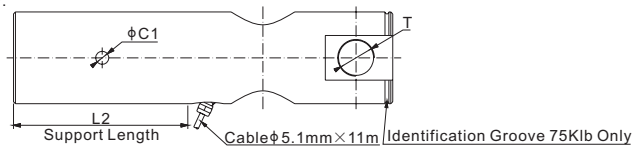

Hardware kit (to be ordered separately)

Part#: 563WS30-F-PARTS-A
include:
1 x Mounting Stud
1 x Lock Plate
1 x Support Post
1 x Rubber Shield
1 x Mounting Base
2 x O-rings
1 x Clamp
(Interchangeable: Avery Weigh-Tronix Easi-Post Suspension Kit)

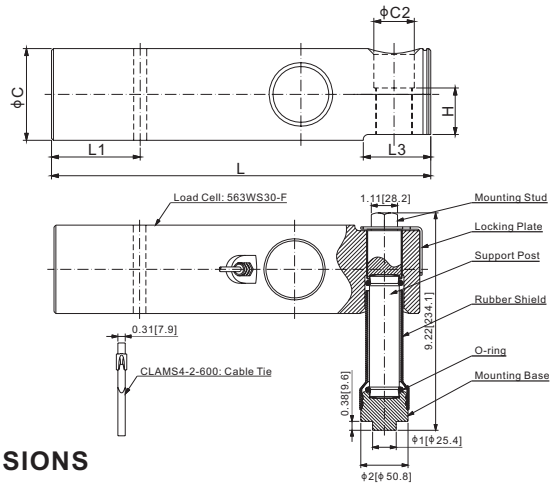

RoHS

*: Input 3.0mV/V only

DIMENSIONS

RATED CAPACITY	C		C1		C2		L		L1		L2		L3		H		T
563WS30-F:																	
lb	**inch**	**mm**	**inch**	**mm**	**inch**	**mm**	**inch**	**mm**	**inch**	**mm**	**inch**	**mm**	**inch**	**mm**	**inch**	**mm**	
60,000-75,000	3.75	95.2	0.53	13.5	1.65	42.0	15.5	393.7	3.63	92.1	7.13	181.0	2.76	70.0	1.90	48.3	$1-\frac{1}{2}$-18 UNEF

www.anyload.com
© 2025 ANYLOAD V1 dimensions and specifications subject to change without notice

563WS; 563WS30

Stainless Steel

SPECIFICATIONS

Full Scale Output	563WS: 2.0 mV/V ± 1% 563WS30: 3.0 mV/V ± 1%	**Input Resistance**	563WS;563WS30(CG): 350Ω ± 7 563WS30-F: 375Ω ± 25
Zero Balance	± 0.02 mV/V	**Output Resistance**	350Ω ± 3
Non-linearity	563WS;563WS30(CG): < ± 0.023% 563WS30-E(-F; -H): < ± 0.02%	**Recommended Excitation**	10V (15V Maximum)
		Insulation Resistance	>2 [50V DC] GΩ
Repeatability	563WS;563WS30(CG): < ± 0.023% 563WS30-E(-F; -H): < ± 0.02%	**Compensated Temperature Range**	-10°C to 50°C / 14°F to 122°F
		Safe Overload	150% of full scale
Hysteresis Error	563WS;563WS30(CG): < ± 0.023% 563WS30-E(-F; -H): < ± 0.03%	**Breaking Overload**	300% of full scale
		Seal Type / IP Rating	Environmentally Sealed / IP67
Creep in 30 min.	563WS;563WS30(CG): < ± 0.030% 563WS30-E(-F; -H): < ± 0.03%	**Cable Color Code**	Exc+ Red Exc- Black Sig+ Green Sig- White Shield Bare
Element Material	2Cr13 Stainless Steel		

Rated Capacity	Part Number*	Weight Approx. (lb)	INTERCHANGEABLE REFERENCE			
			Avery Weigh-Tronix	Coti-Global	Rice Lake	Rice Lake
1.25Klb**	563WS-1.25Klb-YZ**	4.85	Weigh Bar	CG-WB-SS-1.25Klb	RL75000 SS-1.25Klb	RL32011WB-L-1.25Klb
2.5Klb	563WS-2.5Klb-YZ	6.61	Weigh Bar	CG-WB-SS-2.5Klb	RL75000 SS-2.5Klb	RL32011WB-L-2.5Klb
5Klb	563WS-5Klb-YZ	13.23	Weigh Bar	CG-WB-SS-5Klb	RL75000 SS-5Klb	RL32011WB-L-5Klb
10Klb	563WS-10Klb-YZ	15.43	Weigh Bar	CG-WB-SS-10Klb		RL32011WB-L-10Klb
25Klb	563WS-25Klb-YZ	34.17	Weigh Bar			
25Klb	563WS-25Klb-YZ-CG	34.17		CG-WB-SS-25Klb		
37.5Klb	563WS30-37.5Klb-YZ-CG	40.79		CG-WB-SS-37.5Klb		
37.5Klb	563WS30-37.5Klb-YZ	40.79	Weigh Bar			
50Klb	563WS30-50Klb-YZ	46.30	Weigh Bar			
50Klb	563WS30-E-50Klb-YZ-RP	40.79	27173	CG-WB-SS-50Klb-27173		
50Klb	563WS30-H-50Klb-YZ-RP	46.30	50104	CG-WB-SS-50Klb-50104		
60Klb	563WS30-F-60Klb-YZ-RP	57.32	55829	CG-WB-SS-60Klb-55829		
75Klb	563WS30-F-75Klb-YZ-RP	57.32	AWT27-500080	CG-WB-SS-75Klb-EZPOST		

* ATEX, FM, IECEx approved versions carry the "-Ex" suffix.

**: This is to replace the load cell on LP and Max Deck floor scales from Avery Weigh-Tronix.
Check 563WS-1.25Klb-YZ-WBL if to replace Bolt-In Weigh Bar on Avery Weigh-Tronix old ProDec series.

563WS30: 10Klb-75Klb: up to NTEP 1:10 000 Class III / III L, Multiple Cell

563WS30: 25Klb-75Klb: up to OIML MAA C6, Y=25 000

For further available P/N's & specifications per NTEP/OIML classes, please contact us.

© 2025 ANYLOAD V1 dimensions and specifications subject to change without notice