Digital Amplifier, Aluminum Enclosure

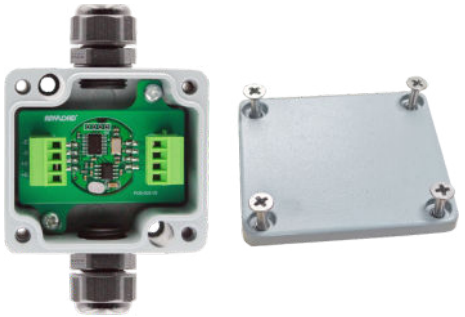

Caution: *Device is not hot-swap safe. Inrush current must be limited to ⩽50 mA to prevent chip damage.*

Features:

- One input port, can connect directly to 1 x 350 Ω load cell, or max 4 x 350 Ω (or higher resistance) load cells through a junction box
- 24-bit A/D Converter, high speed processor
- Internal digital filter and strong anti-interference ability
- Contains ability for 9 point linear calibration
- Applied to all kinds of strain gauge bridge-type load cell, such as , tension, compression, torque and so on
- IP66 Rated (A1A-D25C)

With Aluminum Enclosure

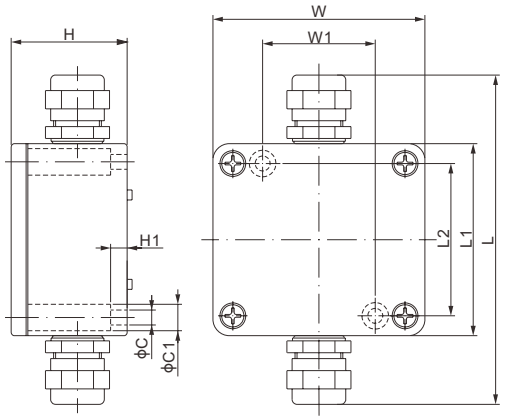

Without Aluminum Enclosure

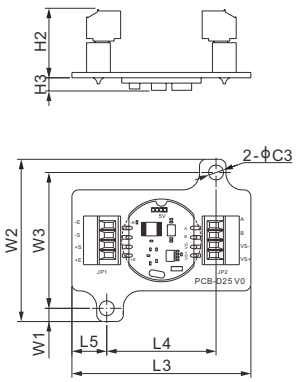

DIMENSIONS

	C	C1	H	H1	L	L1	L2	W	W1	C3	H2	H3	L3	L4	L5	W2	W3	W4
inches	0.18	0.33	1.38	0.20	3.94	2.28	1.81	2.52	1.34	0.18	0.83	0.16	2.13	1.30	0.41	1.93	1.61	0.16
mm	4.5	8.5	35.0	5.0	100.0	58.0	46.0	64.0	34.0	4.5	21.0	4.0	54.0	33.0	10.5	49.0	41.0	4.0

SPECIFICATIONS

Load Cell Type	All strain gage type	**Temperature Coefficient**	⩽100 ppm / °C
Power Supply	9 - 24 V DC	**Resolution**	>1000000
Power Consumption	0.36 W @ 12 V DC	**Output Signal**	RS-232 (A1A-DM2507C) RS-485 (A1A-DM2508C) CAN Bus (A1A-DC2508C) CAN Bus,CAN J1939 (A1A-DC2508-J1939C)
Input Range	-3.9 to +3.9 mV/V		
Working Temperature	-22 °F - 122 °F / -30 °C - 50 °C		
Excitation Voltage To Load Cell	5 V DC		
Non-linearity	⩽0.01%		

PART NUMBER

Without Aluminum Enclosure

Part No.	Output Signal	Protocol	Weight Approx. (kg)
DGB-DM2507C	RS-232	Modbus RTU	0.04
DGB-DM2508C	RS-485	Modbus RTU	0.04
DGB-DC2508C	CAN Bus	CANOpen	0.04
DGB-DC2508-J1939C	CAN Bus	CAN J1939	0.04

With Aluminum Enclosure

Part No.	Output Signal	Protocol	Weight Approx. (kg)
A1A-DM2507C	RS-232	Modbus RTU	0.15
A1A-DM2508C	RS-485	Modbus RTU	0.15
A1A-DC2508C	CAN Bus	CANOpen	0.15
A1A-DC2508-J1939C	CAN Bus	CAN J1939	0.15

CONNECTION DIAGRAM

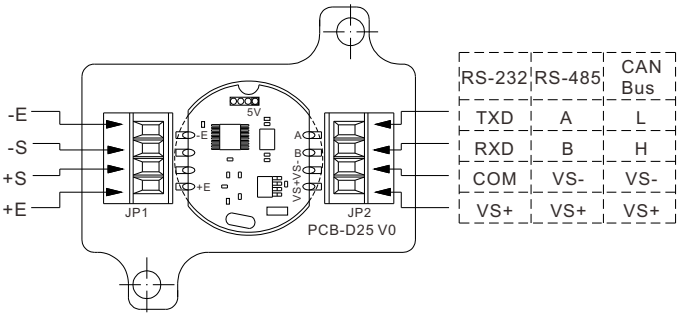

AMPLIFIERS

© 2026 ANYLOAD V5 • dimensions and specifications subject to change without notice

Product Datasheet Disclaimer

Information Changes:
All product specifications, statements, information, and data (collectively, the "Information") in this catalog or made available elsewhere by ANYLOAD are subject to change. Customers must verify the applicability of the Information at the time of order placement.

Accuracy and Reliability:
While all Information is believed to be accurate and reliable, it is presented without guarantee, warranty, or responsibility of any kind, expressed or implied.

Laboratory Conditions:
Data listed in the datasheet is produced within controlled laboratory settings and may not be reproducible without exact replication of all metrological conditions. Users must validate that a product with the described properties is suitable for their applications.

Interchangeability:
Statements of interchangeability with other manufacturers are based on ANYLOAD's knowledge at the time of publication and are not intended to constitute any warranty concerning the substitutability of an ANYLOAD product with one made by another Manufacturer.

Warranty Voidance:
Any use of the product outside of specifications or any storage or installation inconsistent with product guidance voids any warranty.

Intended Use:
The information is intended for use only by customers who have the requisite experience and capability to determine the correct products for their application. ANYLOAD provides technical advice without obligation or liability for the advice given or results obtained.

Component Failures:
Although ANYLOAD designs and manufactures its products to stringent quality and safety standards, isolated component failures may still occur. Applications requiring high reliability or safety should employ suitable designs or safeguards to ensure that component failure does not result in personal injury or property damage.

High-Risk Applications:
Unless specifically agreed to in writing, ANYLOAD has not tested or certified its products, services, or deliverables for use in high-risk applications (e.g., medical life support, nuclear facilities, weapon systems). ANYLOAD makes no assurances that the products are suitable for high-risk uses. Under no circumstances does ANYLOAD warrant or guarantee suitability for any customer design or manufacturing process.

Contact authorized ANYLOAD personnel for special terms and conditions regarding products designed for specific safety requirements.

Safety Measures:
All product-related warnings, cautions, and notes must be observed. Customers should not assume that all safety measures are indicated or that other measures may not be required.

California Proposition 65:

⚠ **WARNING:** Some products manufactured or distributed by ANYLOAD may contain trace amounts of chemicals known to the State of California to cause cancer, birth defects, or other reproductive harm. These substances are present in minimal quantities and are typically encapsulated within our products. This warning is provided to enable you to make informed decisions as a consumer.

© 2026 ANYLOAD V1 • dimensions and specifications subject to change without notice