# 247ASLL

## Stainless Steel





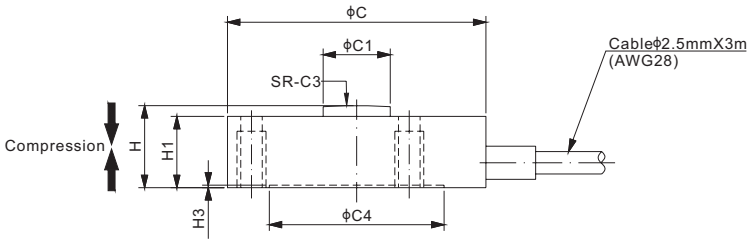


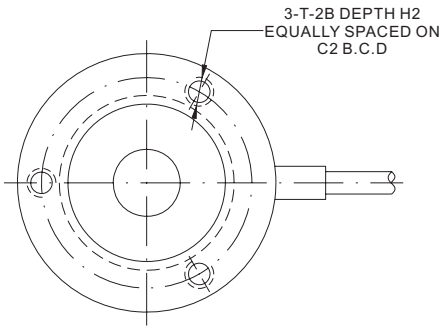


RoHS

### DIMENSIONS

| RATED CAPACITY | C | C1 | C2 | C3 | C4 | H | H1 | H2 | H3 | T |
|---|---|---|---|---|---|---|---|---|---|---|
| **Klb/inches** | | | | | | | | | | |
| 5–10 | 1.48 | 0.43 | 1.25 | 3.00 | 1.08 | 0.63 | 0.55 | 0.25 | 0.03 | #6–32 UNC |
| **kg/mm**(conversion of above dimensions) | | | | | | | | | | |
| 2,267.96–4,535.92 | 37.6 | 10.9 | 31.8 | 76.2 | 27.4 | 16.0 | 14.0 | 6.40 | 0.70 | #6–32 UNC |

### SPECIFICATIONS

| | | | |
|---|---|---|---|
| **Full Scale Output** | 2.0 mV/V ± 20% | **Element Material** | 17-4PH Stainless Steel |
| **Zero Balance** | ± 0.02 mV/V | **Recommended Excitation** | 10V (15V Maximum) |
| **Non-linearity** | Cap.=5Klb: ⩽ ± 0.25%;<br>Cap.=10Klb: ⩽ ± 0.50% | **Insulation Resistance** | >2 [ 50V DC ] GΩ |
| | | **Nominal Temperature Range** | -10°C to 50°C / 14°F to 122°F |
| **Repeatability** | ⩽ ± 0.10% | **Safe Overload** | 150% of full scale |
| **Hysteresis Error** | Cap.=5Klb: ⩽ ± 0.25%;<br>Cap.=10Klb: ⩽ ± 0.50% | **Breaking Overload** | 300% of full scale |
| | | **Seal Type / IP Rating** | IP64 |
| **Creep in 30 min.** | < ± 0.1% | **Cable Color Code** | Exc+ Red Exc- Black<br>Sig+ Green Sig- White<br>Shield Bare |
| **Input Resistance** | 700Ω ± 25 | | |
| **Output Resistance** | 700Ω ± 3 | | |

### PART NUMBER*

| Rated Capacity | Part No. | Weight Approx. (kg) |
|---|---|---|
| 5Klb | 247ASLL-5Klb | 0.4 |
| 10Klb | 247ASLL-10Klb | 0.4 |

* ATEX, FM, IECEx approved versions carry the “-Ex” suffix.





© 2026 ANYLOAD V1 dimensions and specifications subject to change without notice

# Product Datasheet Disclaimer

**Information Changes:**
All product specifications, statements, information, and data (collectively, the "Information") in this catalog or made available elsewhere by ANYLOAD are subject to change. Customers must verify the applicability of the Information at the time of order placement.

**Accuracy and Reliability:**
While all Information is believed to be accurate and reliable, it is presented without guarantee, warranty, or responsibility of any kind, expressed or implied.

**Laboratory Conditions:**
Data listed in the datasheet is produced within controlled laboratory settings and may not be reproducible without exact replication of all metrological conditions. Users must validate that a product with the described properties is suitable for their applications.

**Interchangeability:**
Statements of interchangeability with other manufacturers are based on ANYLOAD's knowledge at the time of publication and are not intended to constitute any warranty concerning the substitutability of an ANYLOAD product with one made by another Manufacturer.

**Warranty Voidance:**
Any use of the product outside of specifications or any storage or installation inconsistent with product guidance voids any warranty.

**Intended Use:**
The information is intended for use only by customers who have the requisite experience and capability to determine the correct products for their application. ANYLOAD provides technical advice without obligation or liability for the advice given or results obtained.

**Component Failures:**
Although ANYLOAD designs and manufactures its products to stringent quality and safety standards, isolated component failures may still occur. Applications requiring high reliability or safety should employ suitable designs or safeguards to ensure that component failure does not result in personal injury or property damage.

**High-Risk Applications:**
Unless specifically agreed to in writing, ANYLOAD has not tested or certified its products, services, or deliverables for use in high-risk applications (e.g., medical life support, nuclear facilities, weapon systems). ANYLOAD makes no assurances that the products are suitable for high-risk uses. Under no circumstances does ANYLOAD warrant or guarantee suitability for any customer design or manufacturing process.

Contact authorized ANYLOAD personnel for special terms and conditions regarding products designed for specific safety requirements.

**Safety Measures:**
All product-related warnings, cautions, and notes must be observed. Customers should not assume that all safety measures are indicated or that other measures may not be required.

---

**California Proposition 65:**

⚠ **WARNING:** Some products manufactured or distributed by ANYLOAD may contain trace amounts of chemicals known to the State of California to cause cancer, birth defects, or other reproductive harm. These substances are present in minimal quantities and are typically encapsulated within our products. This warning is provided to enable you to make informed decisions as a consumer.




© 2026 ANYLOAD V1 dimensions and specifications subject to change without notice