102BH

Alloy Steel

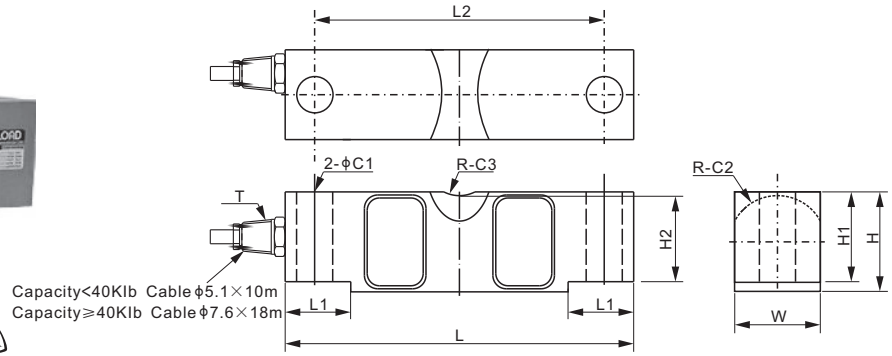

RoHS

DOUBLE ENDED BEAMS

DIMENSIONS

RATED CAPACITY	C1	C2	C3	H	H1	H2	L	L1	L2	W	T
Klb/inches											
10–25	0.68	0.90	0.75	1.94	1.70	1.63	7.75	1.38	6.50	1.69	1/4–18 NPT
40	0.81	1.12	0.98	2.44	2.10	2.03	10.25	1.93	8.50	1.94	1/2–14 NPT
50–75	1.06	1.38	0.98	2.94	2.65	2.53	10.25	1.93	8.50	2.44	1/2–14 NPT
SE100	1.06	1.38	0.98	3.44	2.65	2.53	10.25	1.93	8.50	2.44	1/2–14 NPT
100–125	1.62	1.80	1.50	3.86	3.43	3.30	15.25	3.13	12.75	2.90	1/2–14 NPT
200	1.62	2.37	2.00	5.80	5.12	4.44	19.25	4.00	15.25	3.80	1/2–14 NPT
300	2.12	4.00	2.50	5.80	5.12	4.44	22.00	5.00	17.00	5.80	1/2–14 NPT
400	2.12	5.00	3.00	5.80	5.12	4.44	22.00	5.00	17.00	5.80	1/2–14 NPT
t/mm											
5–15	17.3	22.9	19.1	49.3	43.2	41.5	196.9	35.1	165.1	42.9	1/4–18 NPT
20	20.5	28.4	25.0	62.0	53.4	51.6	260.4	49.0	216.0	49.3	1/4–18 NPT
25–35	27.0	35.0	25.0	74.6	67.2	64.3	260.4	49.0	216.0	62.0	1/2–14 NPT
50	41.2	45.7	38.1	98.0	87.1	83.8	387.4	79.5	323.9	73.7	1/2–14 NPT

SPECIFICATIONS

Full Scale Output	3.0 mV/V ± 0.25%	**Recommended Excitation**	10V (15V Maximum)
Zero Balance	± 0.02 mV/V	**Insulation Resistance**	>2 [50V DC] GΩ
Non-linearity	< ± 0.023%	**Compensated Temperature Range**	-10°C to 50°C / 14°F to 122°F
Repeatability	< ± 0.017%	**Safe Overload**	150% of full scale
Hysteresis Error	< ± 0.023%	**Breaking Overload**	300% of full scale
Creep in 30 min.	< ± 0.023%	**Seal Type / IP Rating**	Environmentally Sealed / IP67
Input Resistance	700Ω ± 10	**Cable Color Code**	Exc+ Red Exc- Black
Output Resistance	700Ω ± 5		Sig+ Green Sig- White
Element Material	Alloy Steel, Nickel Plated		Shield Bare

PART NUMBER*

Rated Capacity	Part No.	Weight (kg) Approx.
10Klb	102BH-10Klb	2.9
20Klb	102BH-20Klb	3.0
25Klb	102BH-25Klb	3.0
40Klb	102BH-40Klb	7.0
50Klb	102BH-50Klb	9.0
60Klb	102BH-60Klb	9.0
75Klb	102BH-75Klb	9.0
SE100Klb	102BH-SE100Klb	10.0
100Klb	102BH-100Klb	20.5
125Klb	102BH-125Klb	20.5
200Klb	102BH-200Klb	47.0
300Klb	102BH-300Klb	75.0
400Klb	102BH-400Klb	80.5
5t	102BH-5t	3.0
10t	102BH-10t	3.0
15t	102BH-15t	3.0
20t	102BH-20t	7.0
25t	102BH-25t	9.0
30t	102BH-30t	9.0
35t	102BH-35t	9.0
50t	102BH-50t	20.5

Lightning Protection Version:

60Klb	102BH-60Klb-02	9.0
75Klb	102BH-75Klb-02	9.0

SE refers to small envelope

* ATEX, FM, IECEx approved versions carry the "-Ex" suffix.

WEIGH MODULE

Model	Page
102BHM1	142

INTERCHANGEABLE REFERENCE

Manufacturer	Model
Coti Global	CG-58
Rice Lake	RL75058
Vishay Celtron	CLB
Vishay Revere Transducers	5303
Vishay Sensortronics	65058A*
Vishay Tedea-Huntleigh	4158

** Sensortronics 65058A has SE50Klb and 50Klb.*

25Klb-125Klb: NTEP 1:10 000 Class IIIL, Multiple Cell

11t-55t: OIML MAA C3, Y=7500

© 2023 ANYLOAD V1 dimensions and specifications subject to change without notice