563YSSB

Stainless Steel

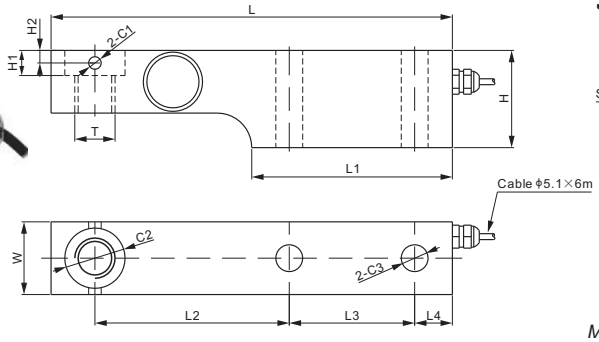

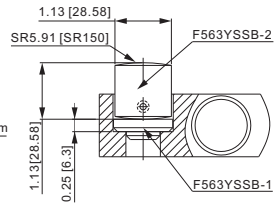

Material of both F563YSSB-1 & F563YSSB-2 is 2Cr13 with electropolishing

Hardware to be ordered separately.

DIMENSIONS

RATED CAPACITY	C1	C2	C3	H	H1	H2	L	L1	L2	L3	L4	W	T
Klb/inches													
2.5–5	0.25	1.20	0.54	1.94	0.75	0.25	8.00	4.00	3.87	2.50	0.75	1.45	3/4–16 UNF–2B
10–20	0.25	1.20	0.78	2.46	0.75	0.25	9.00	4.00	5.25	2.00	0.75	1.94	0.69
kg/mm (conversion of above dimensions)													
1,134.0–2,268.0	6.35	30.5	13.6	49.2	19.0	6.35	203.2	101.6	98.4	63.5	19.1	36.8	3/4–16 UNF–2B
4,535.9–9,071.8	6.35	30.5	19.9	62.5	19.0	6.35	228.6	101.6	133.4	50.8	19.1	49.3	17.45

SPECIFICATIONS

Full Scale Output	2.0 mV/V ± 0.25%	**Recommended Excitation**	10V (15V Maximum)
Zero Balance	± 0.02 mV/V	**Insulation Resistance**	>2 [50V DC] GΩ
Non-linearity	< ± 0.023%	**Compensated Temperature Range**	-10°C to 50°C / 14°F to 122°F
Repeatability	< ± 0.023%	**Safe Overload**	150% of full scale
Hysteresis Error	< ± 0.023%	**Breaking Overload**	300% of full scale
Creep in 30 min.	< ± 0.030%	**Seal Type / IP Rating**	Welded Seal / IP68
Input Resistance	350Ω ± 7	**Cable Color Code**	Exc+ Red Exc- Black Sig+ Green Sig- White Shield Bare
Output Resistance	350Ω ± 3		
Element Material	17-4PH Stainless Steel		

PART NUMBER*

Rated Capacity	Part No.	Weight Approx. (kg)
2.5Klb	563YSSB-2.5Klb	2.3
5Klb	563YSSB-5Klb	2.4
10Klb	563YSSB-10Klb	4.0
20Klb	563YSSB-20Klb	4.8

Hardware

Hardware	Load Cell Capacity	Part No.	Weight Approx. (kg)
Insert	(2.5-20)Klb	F563YSSB-1	-
Rocker Pin	(2.5-20)Klb	F563YSSB-2	-

* ATEX, FM, IECEx approved versions carry the "-Ex" suffix.

2.5Klb: NTEP 1:5 000 Class III, Single Cell;
NTEP 1:9 500 Class III, Multiple Cell
5Klb-20Klb: NTEP 1:6 000 Class III, Single Cell;
NTEP 1:10 000 Class III, Multiple Cell
2.5Klb-5Klb: OIML MAA C5, Y=26 000;
10K-20Klb: OIML MAA C6, Y=8 500

For further available P/N's & specifications per NTEP/OIML classes, please contact us.

INTERCHANGEABLE REFERENCE

Brand	Model
Cardinal	SB2500S
Cardinal	SB5000S
Cardinal	SB10000S
Cardinal	SB20000S
Coti Global	CG-SB250
Rice Lake	RLSB250*

** Rice Lake RLSB250 is through hole design.*

© 2024 ANYLOAD V1 dimensions and specifications subject to change without notice

Product Datasheet Disclaimer

All product specifications, statements, information and data (collectively, the "Information") in this catalog or made available elsewhere by ANYLOAD are subject to change. The customer is responsible for checking and verifying the extent to which the Information contained in this publication is applicable to an order at the time the order is placed. All Information given herein is believed to be accurate and reliable, but it is presented without guarantee, warranty, or responsibility of any kind, expressed or implied.

Data listed in the datasheet is produced within controlled laboratory settings and may not be reproduceable without exact replication of all conditions. It is the customer’s responsibility to validate that a particular product with the properties described in the product specifications is suitable for use in their applications. Statements of interchangeability with other manufacturers are based on ANYLOAD's knowledge of product information at the time a publication was made, but are not intended to constitute any warranty concerning the substitutability of an ANYLOAD product with one made by another manufacturer.

Any use of product outside of specifications or any storage or installation inconsistent with product guidance voids and warranty.

The information is intended for use only by customers who have the requisite experience and capability to determine the correct products for their application. Any technical advice inferred from this Information or otherwise provided by ANYLOAD with reference to the use of ANYLOAD's products produces no obligation or liability for the advice given or results obtained.

Although ANYLOAD designs and manufactures its products to the most stringent quality and safety standards, isolated component failures may still occur. Accordingly, customer applications which require a high degree of reliability or safety should employ suitable designs or other safeguards in order to ensure that the failure of an electrical component does not result in a risk of personal injury or property damage.

Unless specifically agreed to in writing, ANYLOAD has not tested or certified its products, services or deliverables for use in high risk applications including medical life support, medical device, direct physical patient contact, water treatment, nuclear facilities, weapon systems, mass and air transportation control, flammable environments, or any other potentially life critical uses. Customer understands and agrees that ANYLOAD makes no assurances that the products, services or deliverables are suitable for any high-risk uses. Under no circumstances does ANYLOAD warrant or guarantee suitability for any customer design or manufacturing process. Although all product－related warnings, cautions and notes must be observed, the customer should not assume that all safety measures are indicted or that other measures may not be required. Please contact authorized ANYLOAD personnel to obtain special terms and conditions regarding products designed for such applications or otherwise satisfy specific safety requirements.

© 2024 ANYLOAD V1 dimensions and specifications subject to change without notice