J04ES-FS; J04SS-FS

Stainless Steel

Features:

- Enclosure Material: Stainless steel casting
- Number of cells: 2 - 4 single cells
- Trimming: Individual cell with excitation or signal trim
- Equipped with independent potentiometers
- Captive stainless steel screws
- IP Rating: IP65

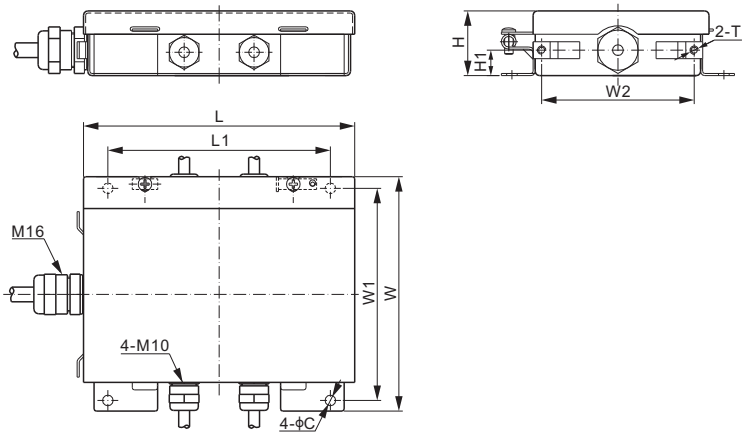

DIMENSIONS

	C	H	H1	L	L1	W	W1	W2	T
mm	5.0	31.0	12.0	128	105	110.5	100	72	M4
inches	0.2	1.2	0.5	5.0	4.1	4.4	3.9	2.8	M4

SPECIFICATIONS

Number of Cells	2 - 4 single cells	**Trimming**	Individual cell with excitation or signal trim
Input Cable Fittings	M10: 3mm - 6.2mm diameter cable	**Enclosure Material**	Stainless steel casting
Output Cable Fittings	M16: 4mm - 8mm diameter cable	**IP Rating**	IP65

TRIMMING RANGE

Load Cell Resistance	Signal Trim	Excitation Trim
350Ω	3.6% of output	2.3% of output
700Ω	6.3% of output	1.3% of output
1000Ω	7.0% of output	1.0% of output

PART NUMBER*

Trimming	Part No.	Weight (kg) Approx.
Excitation Trim	J04ES-FS	0.5
Signal Trim	J04SS-FS	0.5

* ATEX, FM, IECEx approved versions carry the "-Ex" suffix.

MOTHERBOARD LAYOUT

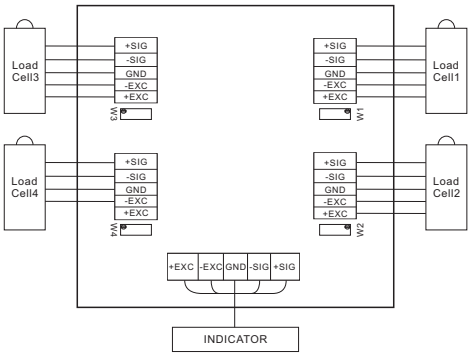

www.anyload.com
© 2023 ANYLOAD V1 dimensions and specifications subject to change without notice