STA Series

- S-Type Load Cell
- Aerospace Aluminum
- Meets OIML and HB44 Class III Standards

Ordering Code: STA-(capacity)

* Specifications subject to change without notice.



SPECIFICATIONS:

Rated Output (R.O.):	2.0 MV/V ± 1%
Zero Balance:	± 2% of R.O.
Non-Linearity:	0.02% of R.O.
Hysteresis:	0.02% of R.O
Non-Repeatability:	0.02% of R.O
Creep (1 Hour):	0.05% of Load
Insulation:	> 5,000M Ohm
Input Impedance:	385 ± 30 Ohm
Output Impedance:	350 ± 4 Ohm
Safe Overload:	150% F.S.
Ultimate Overload:	200% F.S.
Compensated Temperature Range:	-10°C to 40°C
Operating Temperature Range:	-40°C to 80°C
Temperature Effect on Output:	20 ppm/°C of Load
Temperature Effect on Zero:	20 ppm/°C of R.O.
Recommended Excitation:	10V DC/AC
Maximum Excitation:	20V DC/AC

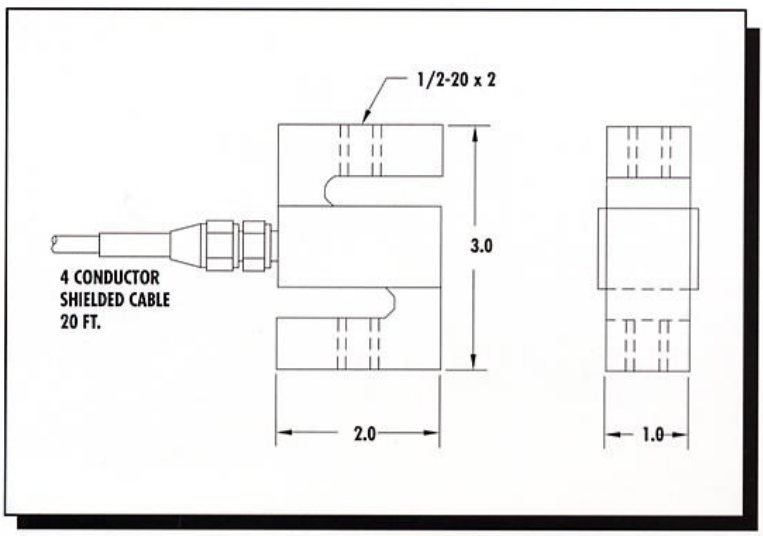

Capacities are available in 50, 100, 150, 200 and 250 Kg.

Color Code: Red + Excitation, Green + Signal, Black - Excitation, White - Signal

Cable Length: 20 ft.

AmCells Corp.

We'll take a load off your mind.

AmCells Corp.
CA 92081
Tel: (888) AMCELLS in the U.S. & Canada
(760)727-6666 in Southern California
Fax: (760)598-6666
www.AmCells.com