ANYLOAD®

363TSM1
Load Cell & Mounting Plate

363TSM1
Compression Weigh Module

IP68 IP69K

STAINLESS STEEL
HERMETICALLY SEALED



Options:

- FM, ATEX, IEcEX Approved

PRODUCT PAGE

Mounting Plate
Included with Module



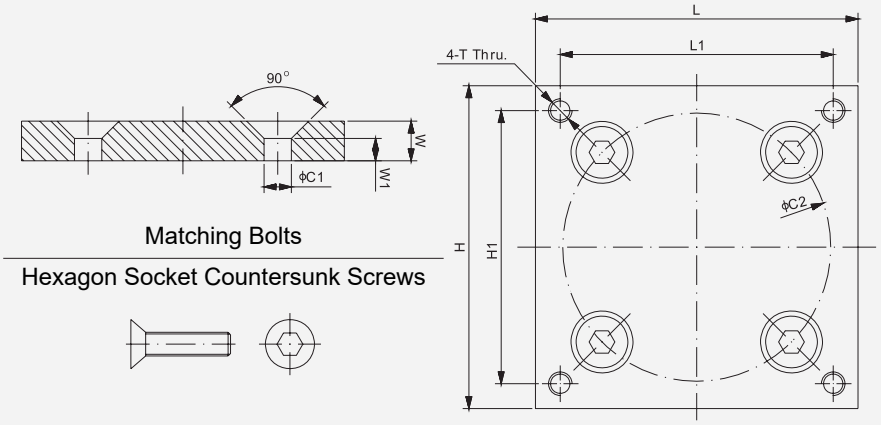

Capacity	H	H1	L	L1	W	W1	W	W1	C1	C2	T
5-20Klb	5.30	0.50	0.75	11.00	8.00	5.50	3.00	7.50	4.00	3.00	5.50
30-75Klb	8.41	0.75	0.94	15.00	11.50	7.76	5.12	10.00	6.00	5.12	7.76

1-855-269-5623
www.anyload.com

363TSM1 Kits →

363TSM1

3, 4 Module Kits



Part Number / Capacity	J-Box	Cable
3 Module Kit	*J-Box (specify model when ordering)	
MK3-363TSM1-**1Klb**-E	**J04EA-16**	1 roll (20m/65ft)
MK3-363TSM1-**2.5Klb**-E		
MK3-363TSM1-**5Klb**-E		
MK3-363TSM1-**25Klb**-E		
MK3-363TSM1-**50Klb**-E		
MK3-363TSM1-**100Klb**-E		
4 Module Kit	*J-Box (specify model when ordering)	
MK4-363TSM1-**1Klb**-E	**J04EA-16**	1 roll (20m/65ft)
MK4-363TSM1-**2.5Klb**-E		
MK4-363TSM1-**5Klb**-E		
MK4-363TSM1-**25Klb**-E		
MK4-363TSM1-**50Klb**-E		
MK4-363TSM1-**100Klb**-E		

MK4 J-Box: Signal or Excitation / Aluminum, Stainless Steel or Fiberglass Enclosure

Complete Kit Includes

- **363TSM1 Mounts**
- **Junction Box (Signal or Exc)**
- **Load Cell Cable**
- ***Optional*** Top Plate**

Features

- Capacities (per module) 1Klb-200Klb
- Ultra Low Profile
- Rocker Pin allows 360° Vessel Thermal Expansion
- Rocker Pin Allows up to 3° of Tilt of Vessel Leg from Base Plate
- Side load and Uplift Protection up to 50% of Rated Capacity
- Integrated threaded top holes

Applications

- High Capacity Hopper and Vessel Weighing

Drawings

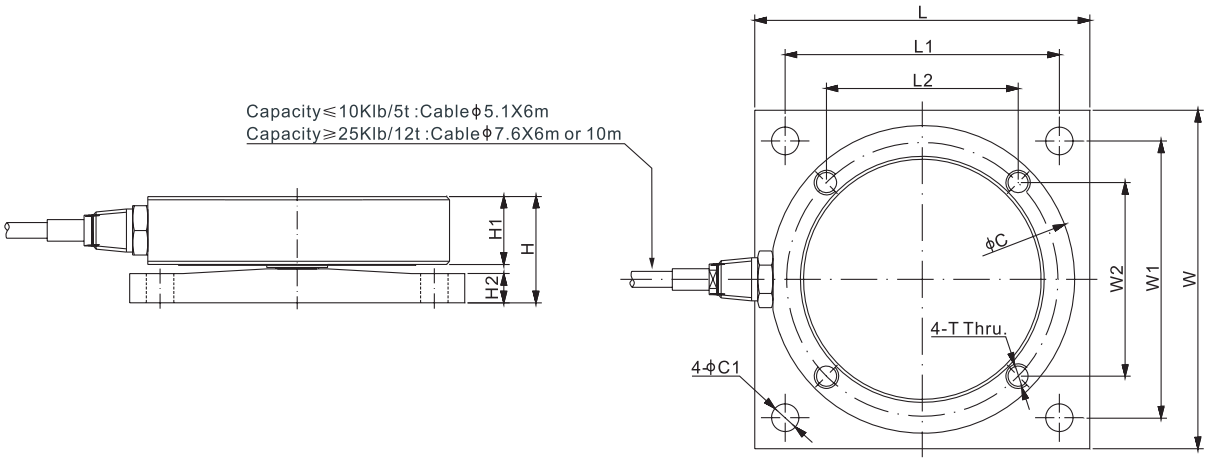

Dimensions (inches)

Capacity	C	C1	H	H1	H2	L	L1	L2	W	W1	W2	T
1-2.5Klb	3.94	0.35	1.02	0.65	0.26	4.33	3.54	2.48	4.33	3.54	2.48	5/16-18 UNC-2B
5-10Klb	4.72	0.35	1.40	0.93	0.33	5.12	4.33	3.00	5.12	4.33	3.00	3/8-16 UNC-2B
25-50Klb	5.75	0.53	2.17	1.38	0.55	6.22	4.92	3.51	6.22	4.92	3.51	1/2-20 UNF-2B
100Klb	8.43	0.83	3.07	1.97	0.83	9.84	8.11	4.98	9.84	8.11	4.98	3/4-16 UNF-2B
200Klb	9.84	1.06	3.82	2.32	1.14	11.22	8.86	5.76	11.22	8.86	5.76	1-14 UNS-2B

www.anyload.com | Phone: 1-855-269-5623
© 2025 Anyload Weigh & Measure Inc. Specifications subject to change without notice.