Warning ⚠

1. Do not move load cell by cable.
2. Do not exceed rated load limit of unit.
3. Do not use for purposes other than weight.
4. Do not use any load bearing component that is worn beyond 5% of its original dimension.
5. Do not use this product if any of the components are cracked.
6. Monitor the output during installation to avoid overloading **(Overloading causes load cell damage)**.
7. Do not make alterations or modifications to the unit.
8. Do not operate without all shields and guards in place.
9. Do not place fingers into slots or pinch points.

Allowable Directions of Movement

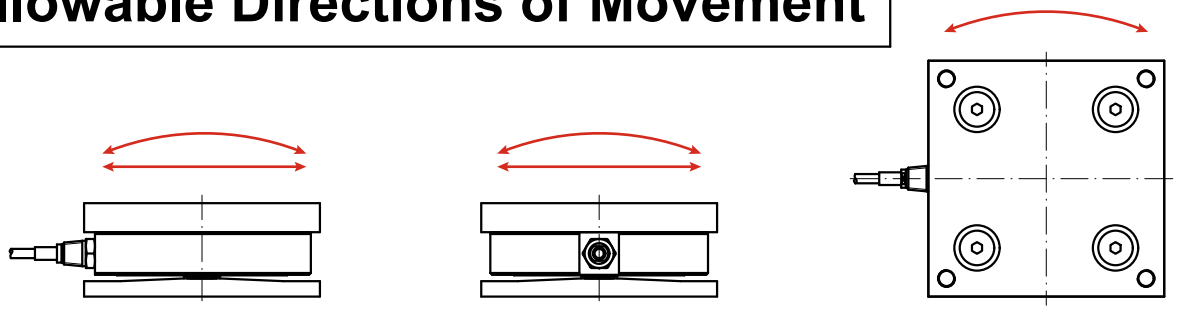

Generic Installation

1.1 Mounting surfaces for plates must be level.

1.2 The top and bottom plates must be level within ±0.5°

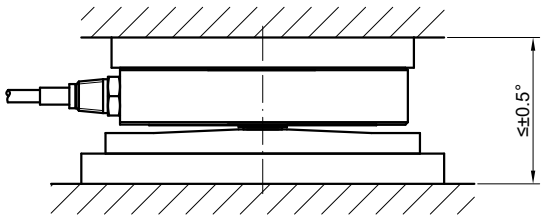

1

⚠ If the mounting surfaces are not level, use shims and/or grout to level the mount.

2.1 Check that the mount is level when the vessel is fully loaded. Excessive deflection in legs and supporting structures can cause additional side forces which negatively affects accuracy. Deflection of the mount top or base plate due to loading must not exceed ±0.5° of the original dimensions. Reinforcement of legs or other support structures may be necessary to correct this. Vessels with long legs should have cross bracing applied between adjacent legs to keep them from spreading under load.

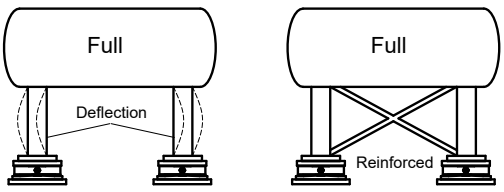

2

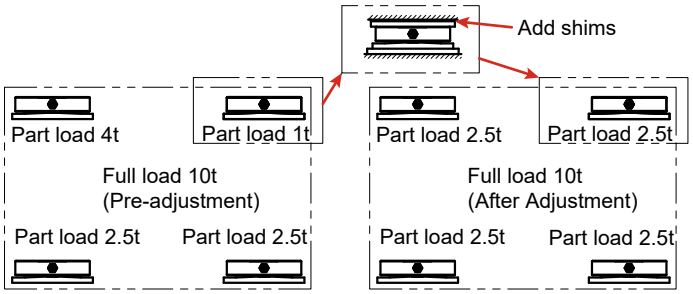

3.1 Compression measurement systems use between three to eight mounts.

3.2 The maximum applied load per weigh module must not exceed 120% of the Rated Capacity.

3.3 Use shims to achieve correct load distribution.

3

4.1 It is crucial that all piping or conduit is horizontal and flexible to minimize resultant forces. The force's effects become even more apparent in lower capacity tanks and hoppers and isolating them becomes extremely critical.

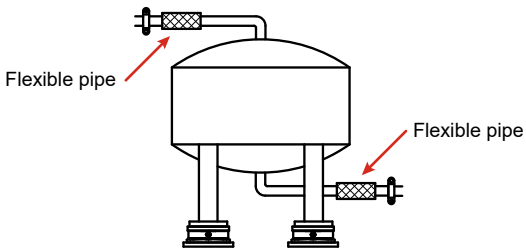

4

⚠ If flexible piping is not used, ensure the distance from the tank to the first pipe support is 20-30 times greater than the pipe diameter (i.e. a 2" rigid pipe support should be 40-60" away from the tank).

How to install 363TSM1

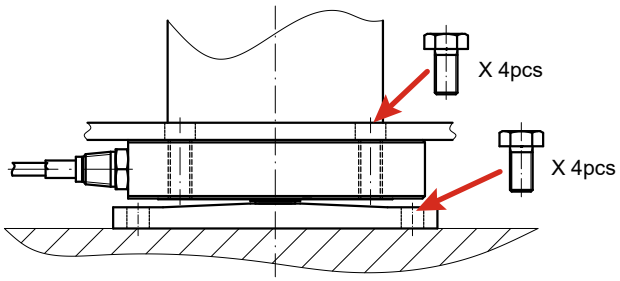

5.1 Mount the base of the 363TSM1 to the abutment using the 4 bolts.

5.2 Attach the unit support leg to the 363TSM1 using 4 bolts.

5.3 A tank or hopper can exert huge forces when dropped only a fraction of an inch, take care when installing the weigh module to prevent overload damage.

5.4 The non-contact surface is only 0.5mm lower than the contact surface. The support leg mounting surface must be flat within 0.2mm.

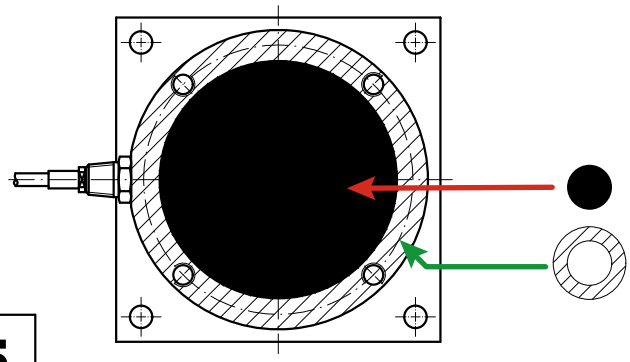

5

How to install 363TSM1 + TP363TSM1

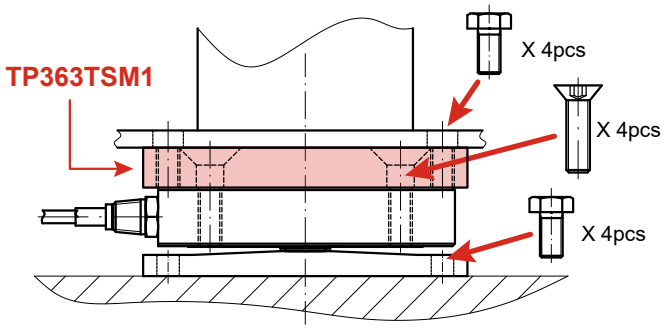

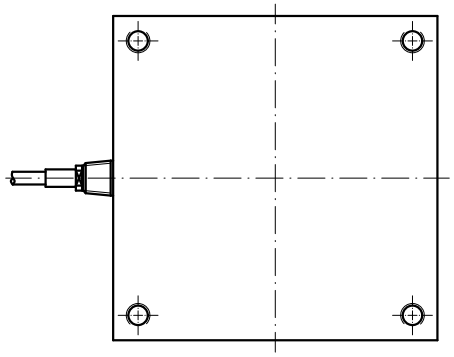

6.1 Mount the TP363TSM1 to the 363TSM1 using four screws included with the TP363TSM1.

6.2 Mount the base of the 363TSM1 to the abutment using the 4 bolts.

6.3 Attach the unit support leg to the TP363TSM1 using 4 bolts.

6.4 A tank or hopper can exert huge forces when dropped only a fraction of an inch, take care when installing the weigh module to prevent overload damage.

6