ANYLOAD®

A1A-DC2508C

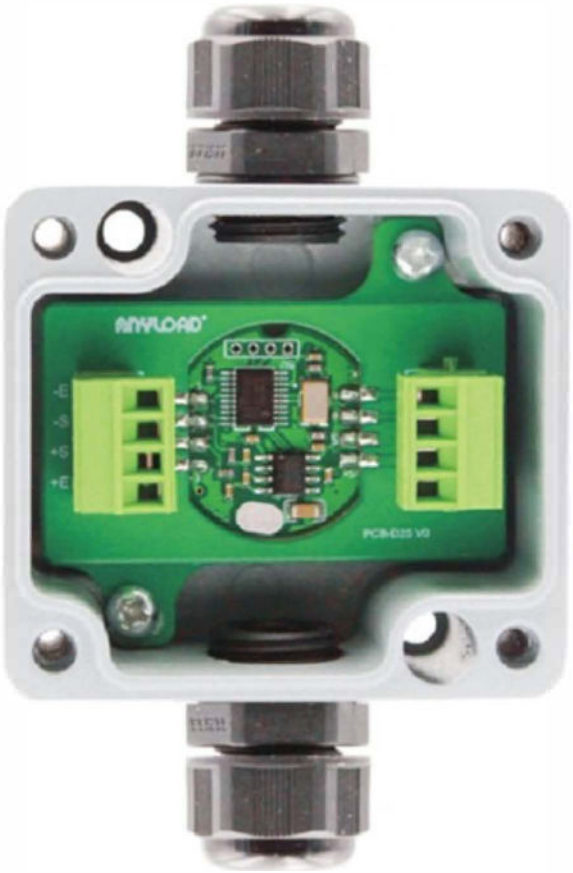

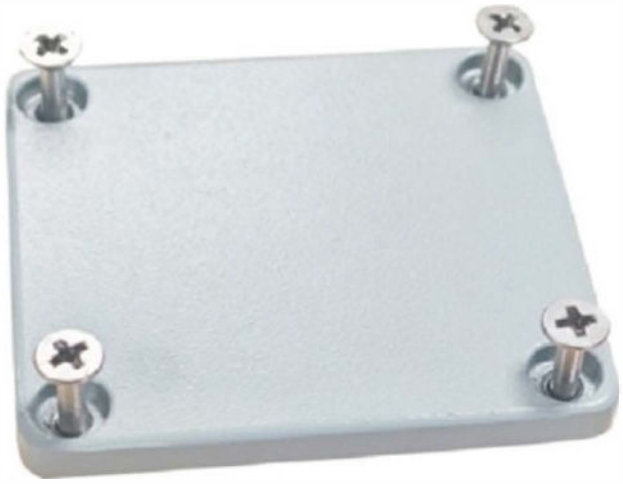

1-855-269-5623
www.anyload.com

PN-250605

TECHNICAL MANUAL

V1.0.0

© ANYLOAD Weigh & Measure Inc. All rights reserved.

ANYLOAD® is a registered trademark of ANYLOAD Weigh & Measure Inc.
All other brand or product names mentioned in this document are trademarks or registered trademarks of their respective owners.

All information contained in this document is, to the best of our knowledge, complete and accurate at the time of publication. ANYLOAD Weigh & Measure Inc. reserves the right to make changes to the technology, features, specifications, and design of its equipment without prior notice.

The most current version of this document, along with any software, firmware, and other product updates, can be found on our website:

www.anyload.com

Legal Notice

ANYLOAD products are subject to our **Standard Terms and Conditions of Sale**, **Warranty Policy**, and applicable regulatory compliance requirements as they may be updated without notice. It is the user's responsibility to ensure proper installation, operation, and maintenance of the equipment as outlined in this manual and in accordance with all relevant laws and standards.

ANYLOAD Weigh & Measure Inc. disclaims all warranties not expressly stated in the Warranty Policy, including but not limited to implied warranties of merchantability and fitness for a particular purpose. ANYLOAD shall not be liable for any direct, indirect, incidental, or consequential damages arising from the use or inability to use this equipment.

CONTENTS

CONTENTS 1
1. Introduction 3
1.1 Safety 3
1.2 Features 3
2. Connection Diagram 5
3. Installation 5
3.1 Connecting Power and Signal Wires 5
3.2 Securing the Board 5
4. Communication Protocol 6
4.1 Communication Examples 7
4.1.1 Reading Measurement Value 8
4.1.2 Setting Transmitter Device Address 8
4.1.3 Tare Weight 8
4.1.4 Zero Setting 8
5. Calibration 9
6. Operation 9
7. Compliance 9
8. Technical Specifications 9
8.1 Drawings & Dimensions 9
8.2 Specifications Table 11

©06/2025 ANYLOAD. *Content subject to change without notice.*

Revision History:

Record with brief description of all revisions made to product or manual

Version	Date	Description
1.0.0	June 6th, 2025	First public release version.

The most current version of this document, along with any software, firmware, and other product updates, can be found on our website:

www.anyload.com

©06/2025 ANYLOAD. *Content subject to change without notice.*

1. Introduction

This manual provides information on installation, configuration, calibration and servicing of the A1A-DC2508C Load Cell Amplifier.

For questions regarding this manual or the operation of ANYLOAD products, please contact your authorized ANYLOAD distributor or visit our website at www.anyload.com for support resources and service information.

1.1 Features

- Configurable CAN Bus output
- 24-bit A/D converter, high speed processor
- Sensor input range: 0.8-3.9mV/V
- Reverse polarity protection

1.2 Safety

READ this manual BEFORE operating or servicing this equipment or systems with this equipment incorporated.

FOLLOW these instructions carefully.

DO NOT allow untrained personnel to operate, clean, inspect, maintain, service, or modify this equipment.

SAVE and distribute this manual for future reference.

Failure to follow the instructions or heed the warnings could result in injury or death. Contact any ANYLOAD dealer or distributor for replacement manuals.

Indicative Markings:

Symbol	Significance
⚠ WARNING ⚠	Warns of a potentially dangerous situation which can result in serious physical injury or death
⚠ CAUTION	Warns of a potentially dangerous situation which can result in slight or moderate physical injury
Notice	Failure to comply to information with this marking may lead to damage to property
⚑ **Important**	Important information about the product
ⓘ **Tip**	Application tips and other information that may be helpful
For emphasis (Italics)	Italics are used to emphasize key information

©06/2025 ANYLOAD. *Content subject to change without notice.*

General Safety:

⚠ WARNING ⚠

ONLY qualified professionals approved should carry out intrinsically safe installations. This work involves extensive knowledge of the product, specific safety standards, and the potentially hazardous environment in which it will be operating.

- Do not allow minors or inexperienced individuals to operate this unit.
- Ensure the unit is fully assembled before operation.
- Keep hands and fingers away from slots, openings, or any potential pinch points.
- Do not use this product if any component appears cracked or damaged.
- Avoid making alterations or modifications to the unit.
- Do not remove or obscure any warning labels.
- Do not submerge the unit in water.
- Before opening the unit, ensure the power cord is disconnected from the power source. Disconnect all power sources before servicing, as multiple power sources may be present. Failure to do so may result in property damage, personal injury, or death.
- For permanently connected equipment, incorporate a readily accessible disconnect device in the building's installation wiring.
- Pluggable units must be installed near an easily accessible socket/outlet.
- Use only copper or copper-clad aluminum conductors when wiring.

Recommendations for Proper Use:

- Keep the instrument away from heat sources and direct sunlight.
- Protect the instrument from rain unless it is a special IP-rated version.
- Do not clean with water jets unless specified for IP-rated models.
- Avoid dipping the instrument in water or spilling liquids on it.
- Use a soft, dry cloth for cleaning; do not use solvents or abrasive materials.
- Do not install the unit in areas with explosion hazards unless with specially rated models.
- If the working environment reaches the unit's temperature limits, ensure proper airflow around the instrument to prevent malfunctions such as sudden shutdowns or disconnections.

Disposal Guidelines:



Product Disposal: Dispose of this product at authorized waste collection centers at the end of its life cycle. Proper disposal prevents environmental and health risks and supports recycling. Illegal disposal may result in legal penalties.

Battery Disposal: Dispose of batteries at designated centers as per local laws. Batteries may contain harmful substances (e.g., Cd, Li, Hg, Pb) and must not be discarded with household waste. Improper disposal may result in legal penalties.

©06/2025 ANYLOAD. *Content subject to change without notice.*

2. Connection Diagram

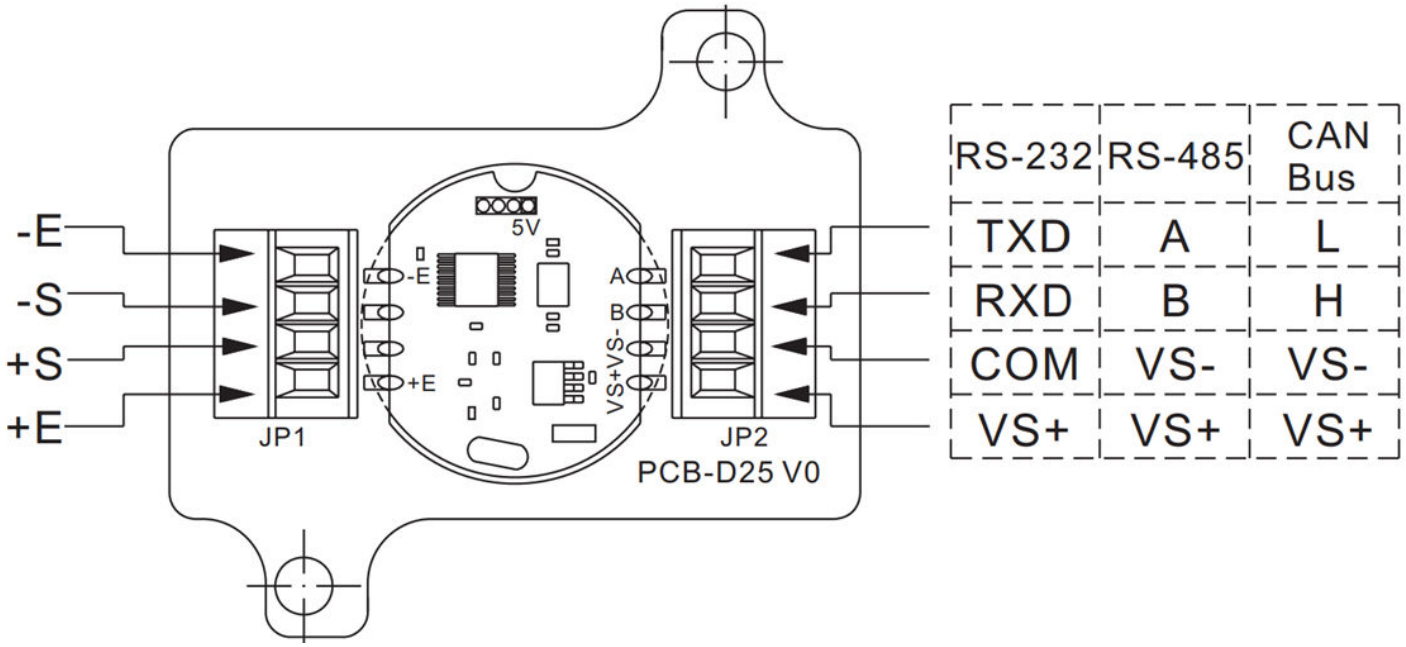

Figure 2-1: Connection Diagram for A1A-DC2508C

3. Installation

3.1 Connecting Power and Signal Wires

Connecting the power, output signal, and load cell to the amplifier can be accomplished with a small flat head screwdriver.

1. Loosen the terminals far enough that the lower section of the terminal clamp is visible.
2. Insert the loose, stripped wire into the terminal, ensure the wire remains near the top of the terminal hole.
3. Once the terminal is tightened, lightly check that the wires are clamped correctly and will not fall out of the terminal.

    Note: If a wire is not clamped correctly, loosen the terminal again, and ensure the wire is inserted properly into the clamp assembly before tightening.

3.2 Securing the Board

The board includes two holes for M3 or 1/8" screws to secure it. Ensure that the board is being installed on appropriate height standoffs to provide adequate space for solder joints and components underneath the board once the assembly is fastened properly.

⚠ CAUTION

Care must be taken when tightening the screws to not overtighten them as this can result in cracking or breaking the PCB.

©06/2025 ANYLOAD. *Content subject to change without notice.*

4. Communication Protocol

4.1 CANOpen Parameters

Table 4-1: CANOpen Index Parameters

Primary Index	Sub-index	Attribute	Data Type	Function Name	Default Parameter	Additional Notes
0x2000	0x00	read only	int32	AV raw value		
0x2001	0x00	read only	int32	PV measured value		
0x2002	0x00	read/write	int32	Device address	01	Device address setting range: 1-127
0x2003	0x00	read/write	int32	Zero value	00	
0x2004	0x00	read/write	int32	Number of calibration points	02	Minimum 2 points, maximum 9 points
0x2005	0x00	read only	int32	1st calibration point raw AV value		
0x2006	0x00	read only	int32	2nd calibration point raw AV value		
0x2007	0x00	read only	int32	3rd calibration point raw AV value		
0x2008	0x00	read only	int32	4th calibration point raw AV value		
0x2009	0x00	read only	int32	5th calibration point raw AV value		
0x200A	0x00	read only	int32	6th calibration point raw AV value		
0x200B	0x00	read only	int32	7th calibration point raw AV value		
0x200C	0x00	read only	int32	8th calibration point raw AV value		
0x200D	0x00	read only	int32	9th calibration point raw AV value		
0x200E	0x00	read/write	int32	1st calibration point PV load value		
0x200F	0x00	read/write	int32	2nd calibration point PV load value		
0x2010	0x00	read/write	int32	3rd calibration point PV load value		
0x2011	0x00	read/write	int32	4th calibration point PV load value		
0x2012	0x00	read/write	int32	5th calibration point PV load value		
0x2013	0x00	read/write	int32	6th calibration point PV load value		
0x2014	0x00	read/write	int32	7th calibration point PV load value		
0x2015	0x00	read/write	int32	8th calibration point PV load value		

©06/2025 ANYLOAD. *Content subject to change without notice.*

Table 4-2: CANOpen Index Parameters Cont.

Primary Index	Sub-index	Attribute	Data Type	Function Name	Default Parameter	Additional Notes
0x2016	0x00	read/write	int32	9th calibration point PV load value		
0x2017	0x00	read/write	int32	ADC sampling speed	1 (10 SPS)	
0x2018	0x00	read/write	int32	FIR filtering	0 (closed)	
0x2019	0x00	read/write	int32	Filter rating	5	Filter level: 0-5
0x201A	0x00	read/write	int32	Filter bandwidth	10	
0x201B	0x00	read/write	int32	Automatic zero tracking time	10 (1 second)	Time unit: 100 milliseconds
0x201C	0x00	read/write	int32	Automatic zero tracking tape	10	
0x201D	0x00	read/write	int32	Stabilization time	10	Judgment of stabilization time: according to the number of samples
0x201E	0x00	read/write	int32	Bandwidth stability	10	
0x201F	0x00	read/write	int32	CAN interface rate	7 (1 Mbps)	
0x2020	0x00	read/write	int32	CAN active send interval	100	Time unit: milliseconds Setting range: 10-5000
0x2021	0x00	read/write	int32	CAN Active Transmission Parameters	1	Active cyclic sending: 255 Passive send: 1
0x2022	0x00	read/write	int32	Reserved parameter 1		
0x2023	0x00	read/write	int32	Reserved parameter 2		
0x2024	0x00	read/write	int32	Reserved parameter 3		
0x2025	0x00	read only	uint8	Number of parameters	3	
	0x01	read only	uint8	Stable mark		
	0x02	read/write	uint8	Zero (a hard drive)		Clear: 0x01, Zero return: 0x00
	0x03	read/write	uint8	Calibrate		Calibration allowed: 0x01 Calibration forbidden: 0x00

Table 4-3: CAN Interface Speed

Value	CAN Interface Speed
0	10Kbps
1	20Kbps
2	50Kbps
3	100Kbps
4	125Kbps
5	250Kbps
6	500Kbps
7	1Mbps

Table 4-4: Baud Rate

Value	ADC Sampling Speed
0	Invalid Value
1	10sps

©06/2025 ANYLOAD. *Content subject to change without notice.*

2	20sps
3	80sps
4	320sps

Table 4-5: FIR Filtering

Value	FIR Filtering
0	Cloture
1	Opens

©06/2025 ANYLOAD. *Content subject to change without notice.*

4.2 CANOpen Read Parameters

Table 4-6: Read Parameters

Serial Number	Functionality	Digital Data	Return Data	Additional Notes
1	Read AV raw value	40 00 20 00 00 00 00 00	43 00 20 00 94 ED 00 00	AV raw value = 0x0000ED94 (60820)
2	Read PV measured value	40 01 20 00 00 00 00 00	43 01 20 00 0F 27 00 00	PV measured value = 0x0000270F (9999)
3	Read device address	40 02 20 00 00 00 00 00	43 02 20 00 01 00 00 00	Device address = 0x00000001(1)
4	Read zero value	40 03 20 00 00 00 00 00	43 03 20 00 00 00 00 00	Zero value = 0x00000000(0)
5	Read calibration points	40 04 20 00 00 00 00 00	43 04 20 00 02 00 00 00	Number of calibration points = 0x00000002(2)
6	Read PVP1 value	40 0E 20 00 00 00 00 00	43 0E 20 00 00 00 00 00	PVP1=0x00000000(0)
7	Read PVP2 value	40 0F 20 00 00 00 00 00	43 0f 20 00 50 C3 00 00	PVP2=0x0000C350(50000)
8	Read AD sampling speed	40 17 20 00 00 00 00 00	43 17 20 00 02 00 00 00	AD sampling rate = 0x00000002(2) → 20SPS
9	Read FIR filter	40 18 20 00 00 00 00 00	43 18 20 00 00 00 00 00	FIR filter = 0x00000000(0) → disabled
10	Read filter level	40 19 20 00 00 00 00 00	43 19 20 00 05 00 00 00	Filter level = 0x00000005(5)
11	Read filter bandwidth	40 1A 20 00 00 00 00 00	43 1a 20 00 0A 00 00 00	Filter bandwidth = 0x0000000A(10)
12	Read auto zero time	40 1B 20 00 00 00 00 00	43 1b 20 00 0A 00 00 00	Auto zero time = 0x0000000A(10) x 100ms
13	Read auto zero bandwidth	40 1C 20 00 00 00 00 00	43 1C 20 00 0A 00 00 00	Auto zero bandwidth = 0x0000000A(10)
14	Readout time	40 1D 20 00 00 00 00 00	43 1D 20 00 0A 00 00 00	Stabilization time = 0x0000000A(10)
15	Readout-stabilized bandwidth	40 1E 20 00 00 00 00 00	43 1E 20 00 0A 00 00 00	Stabilization bandwidth = 0x0000000A(10)
16	Read interface rate	40 1F 20 00 00 00 00 00	43 1F 20 00 07 00 00 00	CAN Interface Rate = 0x00000007(7) → 1Mbps

4.3 CANOpen Write Parameters

Table 4-7: Write Parameters

Serial Number	Functionality	Digital Data	Additional Notes
1	Write equipment device address	22 02 20 00 02 00 00 00	Device address = 0x00000002(2)
2	Write calibration points	22 04 20 00 02 00 00 00	Number of calibration points = 0x00000002(2) Note: calibration must be enabled first (0x2025 -> 0x03 = 0x01)
3	Write PVP1 value	22 0E 20 00 00 00 00 00	
4	Write PVP2 value	22 0F 20 00 00 00 00 00	
5	Write AD sampling speed	22 17 20 00 00 00 00 00	AD sampling rate = 5SPS->0x00000000(0)
6	Write FIR filter	22 18 20 00 01 00 00 00	FIR filter on
		22 18 20 00 00 00 00 00	FIR filter off
7	Write filter level	22 19 20 00 00 00 00 00	Smoothing filter off
		22 19 20 00 01 00 00 00	Filter level = 1
		22 19 20 00 02 00 00 00	Filter level = 2
		22 19 20 00 03 00 00 00	Filter level = 3
		22 19 20 00 04 00 00 00	Filter level = 4
		22 19 20 00 05 00 00 00	Filter level = 5
8	Write filter bandwidth	22 1A 20 00 0A 00 00 00 00	Filter bandwidth = 10
9	Write auto zero time	22 1B 20 00 05 00 00 00	Auto zero time = 500 ms
10	Write auto zero bandwidth	22 1C 20 00 14 00 00 00	Auto zero bandwidth = 20
11	Write to adjust stabilization time	22 1D 20 00 0A 00 00 00 00	Stabilization time = 10
12	Write to adjust stabilize bandwidth	22 1E 20 00 14 00 00 00	Judgment stabilization bandwidth = 20
13	Write CAN interface rate	22 1F 20 00 00 00 00 00	CAN rate = 10Kbps
		22 1F 20 00 01 00 00 00	CAN rate = 20Kbps
		22 1F 20 00 02 00 00 00	CAN rate = 50Kbps
		22 1F 20 00 03 00 00 00	CAN rate = 100Kbps
		22 1F 20 00 04 00 00 00	CAN rate = 125Kbps
		22 1F 20 00 05 00 00 00	CAN rate = 250Kbps
		22 1F 20 00 06 00 00 00	CAN rate = 500Kbps
		22 1F 20 00 07 00 00 00	CAN rate = 1Mbps
14	Calibration enabled	2F 25 20 03 01 00 00 00	Calibration enable field
15	Zero/Zero return	2F 25 20 02 01 00 00 00	Zero
		2F 25 20 02 00 00 00 00	Zero return

©06/2025 ANYLOAD. *Content subject to change without notice.*

5. Calibration

Perform calibration via CAN bus by performing the following:

1. Enable calibration
2. Write *PVPn* value
3. Repeat steps 1-2 until all necessary calibration points are fulfilled (max: 9)
4. Lock calibration (Calibration forbidden)
5. Write calibration points to the appropriate indices
6. End calibration

5.1 Calibration Example

1. Enable calibration	2F 25 20 03 01 00 00 00
2. Write 0 to *PVP1* when idle	22 0E 20 00 00 00 00 00
3. Enable calibration again	2F 25 20 03 01 00 00 00
4. Write the standard load to *PVP2* (i.e. 5kg = 5000, 1g resolution)	22 0F 20 00 88 13 00 00
5. Enable calibration again	2F 25 20 03 01 00 00 00
6. Set calibration points to 2	22 04 20 00 02 00 00 00

6. Operation

- The amplifier is not IP rated and must be kept away from water or debris ingress as these can significantly affect the output or render the amplifier inoperable. An enclosure is strongly recommended.
- For the most stable amplifier readouts, a stable and reliable DC power supply should be used.
- The load cell cable should be run through areas free of electrical and magnetic fields as the load cell must be able to transmit signal differences of a few µV to the amplifier, these fields can induce interference voltages.

7. Technical Specifications

7.1 Drawings & Dimensions

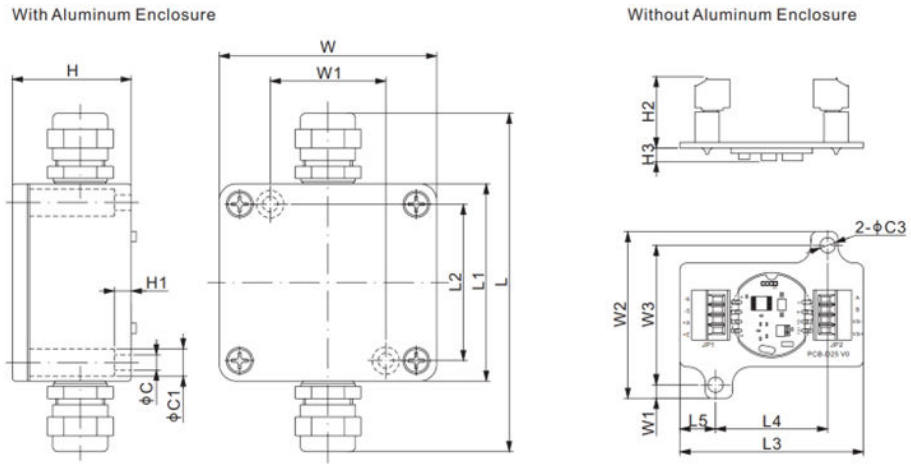

DIMENSIONS

	C	C1	H	H1	L	L1	L2	W	W1	C3	H2	H3	L3	L4	L5	W2	W3	W4
inches	0.18	0.33	1.38	0.20	3.94	2.28	1.81	2.52	1.34	0.18	0.83	0.16	2.13	1.30	0.41	1.93	1.61	0.16
mm	4.5	8.5	35.0	5.0	100.0	58.0	46.0	64.0	34.0	4.5	21.0	4.0	54.0	33.0	10.5	49.0	41.0	4.0

Figure 7-1: Chip Dimensions

7.2 Specifications Table

Table 7-1: Product Specifications

Acceptable Load Cell Type	All strain gauge type
Weight Approx. (g)	150
Power Supply	9~24VDC
Working Temperature	-22°F – 122°F / -30°C – 50°C
Output signal	CAN bus
Output protocol	CANOpen
Non-linearity	<0.01%
Input range	0.8-3.9mV/V
Power consumption	0.36W @ 12V
Load cell excitation voltage	5V

Important

Specifications are subject to change *without* notice. Users are encouraged to refer to our website or confirm with our team any details, questions, or concerns.

©06/2025 ANYLOAD. *Content subject to change without notice.*

Please **Contact Our Authorized Dealer** for Technical Assistance:

Notes:

V1.0.0
PN-250605

1-855-269-5623
www.anyload.com

© 2025 Anyload Weigh & Measure Inc.
Specifications subject to change without notice.