ANYLOAD®

A1A-DC2508-J1939C

Digital Amplifier





1-855-269-5623
www.anyload.com

PN-250909

TECHNICAL MANUAL

V1.0

© ANYLOAD Weigh & Measure Inc. All rights reserved.

ANYLOAD® is a registered trademark of ANYLOAD Weigh & Measure Inc.
All other brand or product names mentioned in this document are trademarks or registered trademarks of their respective owners.

All information contained in this document is, to the best of our knowledge, complete and accurate at the time of publication. ANYLOAD Weigh & Measure Inc. reserves the right to make changes to the technology, features, specifications, and design of its equipment without prior notice.

The most current version of this document, along with any software, firmware, and other product updates, can be found on our website:

www.anyload.com

Legal Notice

ANYLOAD products are subject to our **Standard Terms and Conditions of Sale**, **Warranty Policy**, and applicable regulatory compliance requirements as they may be updated without notice. It is the user's responsibility to ensure proper installation, operation, and maintenance of the equipment as outlined in this manual and in accordance with all relevant laws and standards.

ANYLOAD Weigh & Measure Inc. disclaims all warranties not expressly stated in the Warranty Policy, including but not limited to implied warranties of merchantability and fitness for a particular purpose. ANYLOAD shall not be liable for any direct, indirect, incidental, or consequential damages arising from the use or inability to use this equipment.

CONTENTS

CONTENTS 1
1. Introduction 3
   1.1 Features 3
   1.2 Safety 3
2. Connection Diagram 5
3. Installation 5
   3.1 Connecting Power and Signal Wires 5
   3.2 Securing the Board 5
4. Device Address Claiming (SAE J1939) 6
   4.1 Example Sequence 6
   4.2 Device Behaviours 6
5. Communication Protocol 7
   5.1 CAN J1939 Protocols 7
   5.2 Cyclic Redundancy Check (CRC) 8
   5.3 Examples 8
6. Operation 10
7. Technical Specifications 11
   7.1 Drawings & Dimensions 11
   7.2 Specifications Table 11

Revision History

Record with brief description of all revisions made to product or manual

Version	Date	Description
1.0	2/12/2026	Initial Public Release

The most current version of this document, along with any software, firmware, and other product updates, can be found on our website:

www.anyload.com

1. Introduction

This manual provides information on installation, configuration, calibration, and servicing of the A1A-DC2508-J1939C Load Cell Amplifier.

For questions regarding this manual or the operation of ANYLOAD products, please contact your authorized ANYLOAD distributor or visit our website at www.anyload.com for support resources and service information.

1.1 Features

- Digital output for SAE J1939
- 24-bit A/D converter, high speed processor
- Sensor input range: 0.5-6 mV/V
- Reverse polarity protection

1.2 Safety

READ this manual BEFORE operating or servicing this equipment or systems with this equipment incorporated.

FOLLOW these instructions carefully.

DO NOT allow untrained personnel to operate, clean, inspect, maintain, service, or modify this equipment.

SAVE and distribute this manual for future reference.

Failure to follow the instructions or heed the warnings could result in injury or death. Contact any ANYLOAD dealer or distributor for replacement manuals.

Indicative Markings:

Symbol	Significance
⚠WARNING⚠	Warns of a potentially dangerous situation which can result in serious physical injury or death
⚠CAUTION	Warns of a potentially dangerous situation which can result in slight or moderate physical injury
Notice	Failure to comply to information with this marking may lead to damage to property
Important	Important information about the product
ⓘTip	Application tips and other information that may be helpful
For emphasis (Italics)	Italics are used to emphasize key information

General Safety:

⚠WARNING⚠

ONLY qualified professionals approved should carry out intrinsically safe installations. This work involves extensive knowledge of the product, specific safety standards, and the potentially hazardous environment in which it will be operating.

- Do not allow minors or inexperienced individuals to operate this unit.
- Ensure the unit is fully assembled before operation.
- Keep hands and fingers away from slots, openings, or any potential pinch points.
- Do not use this product if any component appears cracked or damaged.
- Avoid making alterations or modifications to the unit.
- Do not remove or obscure any warning labels.
- Do not submerge the unit in water.
- Before opening the unit, ensure the power cord is disconnected from the power source. Disconnect all power sources before servicing, as multiple power sources may be present. Failure to do so may result in property damage, personal injury, or death.
- For permanently connected equipment, incorporate a readily accessible disconnect device in the building's installation wiring.
- Pluggable units must be installed near an easily accessible socket/outlet.
- Use only copper or copper-clad aluminum conductors when wiring.

Recommendations for Proper Use:

- Keep the instrument away from heat sources and direct sunlight.
- Protect the instrument from rain unless it is a special IP-rated version.
- Do not clean with water jets unless specified for IP-rated models.
- Avoid dipping the instrument in water or spilling liquids on it.
- Use a soft, dry cloth for cleaning; do not use solvents or abrasive materials.
- Do not install the unit in areas with explosion hazards unless with specially rated models.
- If the working environment reaches the unit's temperature limits, ensure proper airflow around the instrument to prevent malfunctions such as sudden shutdowns or disconnections.

Disposal Guidelines:



Product Disposal: Dispose of this product at authorized waste collection centers at the end of its life cycle. Proper disposal prevents environmental and health risks and supports recycling. Illegal disposal may result in legal penalties.

Battery Disposal: Dispose of batteries at designated centers as per local laws. Batteries may contain harmful substances (e.g., Cd, Li, Hg, Pb) and must not be discarded with household waste. Improper disposal may result in legal penalties.

2. Connection Diagram

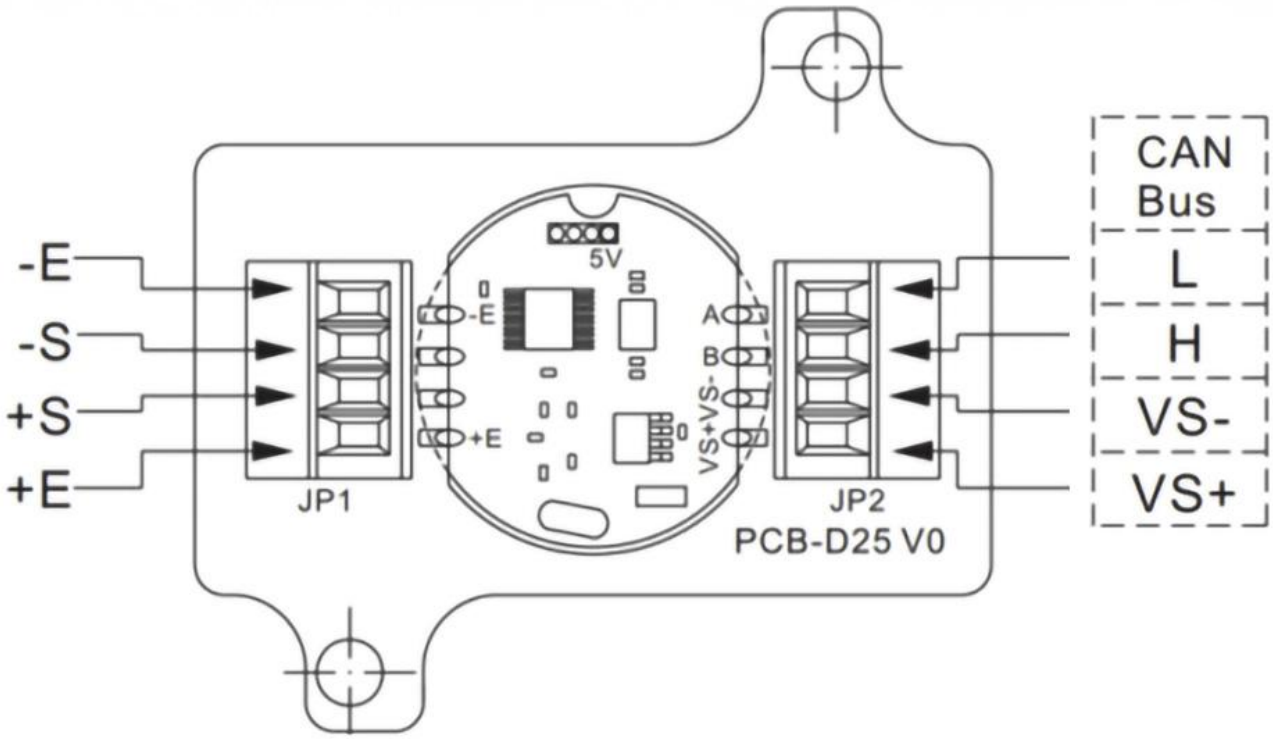

Figure 2-1: Connection Diagram for DGB-DC2508C

3. Installation

3.1 Connecting Power and Signal Wires

Connecting the power, output signal, and load cell to the amplifier can be accomplished with a small flat head screwdriver.

1. Loosen the terminals far enough that the lower section of the terminal clamp is visible.
2. Insert the loose, stripped wire into the terminal, ensure the wire remains near the top of the terminal hole.
3. Once the terminal is tightened, lightly check that the wires are clamped correctly and will not fall out of the terminal.

    Note: If a wire is not clamped correctly, loosen the terminal again, and ensure the wire is inserted properly into the clamp assembly before tightening.

3.2 Securing the Board

The board includes two holes for M3 or 1/8" screws to secure it. Ensure that the board is being installed on appropriate height standoffs to provide adequate space for solder joints and components underneath the board once the assembly is fastened properly.

⚠CAUTION

Care must be taken when tightening the screws to not overtighten them as this can result in cracking or breaking the PCB.

4. Device Address Claiming (SAE J1939)

A1A-DC2508-J1939C complies with the **J1939 Address Claiming Protocol**, ensuring reliable operation on a shared CAN bus where multiple Electronic Control Units (ECUs) may be present.

Key Parameter Group Numbers (PGNs)

PGN (Hex)	Name	Purpose
0xEA00	Request	Ask other ECUs to send Address Claimed
0xEE00	Address Claimed	Device announces SA + NAME, or "Cannot Claim" if SA = 0xFE

4.1 Example Sequence

Step	PGN	Action
1	**0xEA00 (Request)**	Any ECU may send a Request for PGN 0xEE00 (Address Claimed).
2	**0xEE00 (Address Claimed)**	Devices reply with Address Claimed (SA + NAME).
3	–	If two devices claim the same SA, the one with the lowest NAME value keeps it; the loser must select a new SA or send Cannot Claim (SA = 0xFE).
4	**0xEE00 (Address Claimed)**	At startup, a device may also broadcast "Address Claimed" automatically without being requested.

4.2 Device Behaviours

- Each unit is programmed with a **unique NAME** at the factory.
- Identical units therefore always resolve to the **same Source Address**.
- Ensures **consistent addressing** across installations.

5. Communication Protocol

5.1 CAN J1939 Protocols

Table 5-1: Custom J1939 Message Type Definitions for Amplifier Communication

Message Type	Purpose	Operation Key	PGN	DA (Destination Address)	SA (Source Address)	Data Page	Priority	Payload Contents
Write	Write parameter to specific amplifier	0x10	0xEF00	Amplifier Address (xx)	Host/Controller	0	6	Index + Value (e.g., 0x02 + data)
Read	Request parameter value	0x03	0xEF00	Amplifier Address (xx)	Host/Controller	0	6	Index (e.g., 0x02)
Return	Return parameter value in response to read	0x03	0xFF01	Not Used	Device Address	1	6	Index + Value (e.g., 0x02 + data)
Broadcast	Periodic weight/status update	Not Used	0xFF3F	Not Used	Device Address	1	6	Not Used (fixed format)

Table 5-2: CANJ1939 Index Parameters

ID	Name	Description	Value Range	Access
2	Offset	Offsets the RAW AD value being read live	-999999 to 999999	Read/Write
3	Calibration Points	Number of calibration points (2–9)	2 to 9	
4	AV Calibration Value 1	AV Calibration Value 1 (interchangeable with ID 240)	-8,388,607 to 8,388,607	
5	AV Calibration Value 2	AV Calibration Value 2		
6	AV Calibration Value 3	AV Calibration Value 3		
7	AV Calibration Value 4	AV Calibration Value 4		
8	AV Calibration Value 5	AV Calibration Value 5		
9	AV Calibration Value 6	AV Calibration Value 6		
10	AV Calibration Value 7	AV Calibration Value 7		
11	AV Calibration Value 8	AV Calibration Value 8		
12	AV Calibration Value 9	AV Calibration Value 9		
13	PV Calibration Value 1	Physical Weight 1 Corresponding to AV1	-999999 to 999999	
14	PV Calibration Value 2	Physical Weight 2 Corresponding to AV2		
15	PV Calibration Value 3	Physical Weight 3 Corresponding to AV3		
16	PV Calibration Value 4	Physical Weight 4 Corresponding to AV4		
17	PV Calibration Value 5	Physical Weight 5 Corresponding to AV5		
18	PV Calibration Value 6	Physical Weight 6 Corresponding to AV6		
19	PV Calibration Value 7	Physical Weight 7 Corresponding to AV7		
20	PV Calibration Value 8	Physical Weight 8 Corresponding to AV8		
21	PV Calibration Value 9	Physical Weight 9 Corresponding to AV9		
22	ADC Sampling Speed	Configures ADC Sampling Rate (1=10sps, 2=20sps, 3=80sps, 4=320sps)	1 to 4	
23	FIR Filtering	Enable FIR digital filter	0 = OFF, 1 = ON	
24		Preset Filtering Level	1 = Lightest to 5 = Heaviest	
25	Filtering Band	Bandwidth of Filtering	0 to 999999	
26	Zero Tracking Time	Zero Tracking Hold Time	0 to 100 (ms)	
27	Zero Tracking Band	Zero Tracking Bandwidth	0 to 999999	
28	Stability Time	Stability Window Hold Time	0 to 100 (ms)	
29	Stability Band	Stability Bandwidth	0 to 8,388,607 (grams)	
240	Zero	Perform Zero Action	N/A	Write
241	Anti-Zero	Revert the Zero Process	N/A	Write

5.2 Cyclic Redundancy Check (CRC)

The A1A-DC2508-J1939C amplifier uses CRC-16/MODBUS for all custom J1939 messages. CRC-16/MODBUS is a 16-bit cyclic redundancy check with the following parameters

- Polynomial: 0xA001 (reflected from 0x8005)
- Input Reflection: Yes
- Output Reflection: Yes
- Final XOR: 0x0000
- Initial Value: 0xFFFF

Computation Rule

Start CRC = initial value
For each byte:
  CRC = CRC XOR byte
  Repeat 8 times:
    If (CRC & 1) == 1:
      CRC = (CRC >> 1) XOR Polynomial
    Else:
      CRC = CRC >> 1
Final CRC is sent Low Byte first, then High Byte.

5.3 Examples

Example: Write Message (Set Offset to -100)
PGN: 0xEF80
CAN ID: 0x18EF8050 (Priority 6, DA = 0x80, SA = 0x50)
Parameter ID: 0x02 (Offset)
Value: -100 → 0xFFFFFF9C

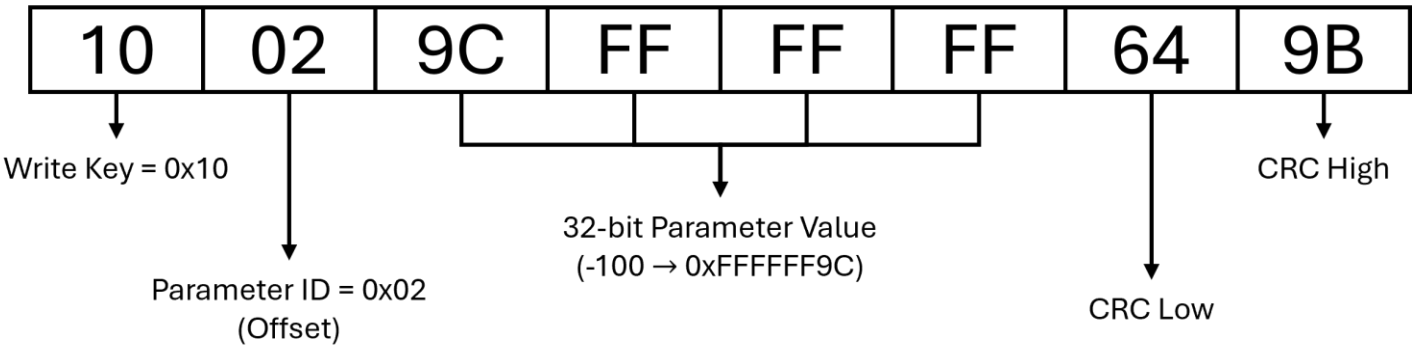

Example: Read Calibration Points
PGN: 0xEF80
CAN ID: 0x18EF8050 (Priority 6, DA = 0x80, SA = 0x50)
Parameter ID: 0x03 (Calibration Points)

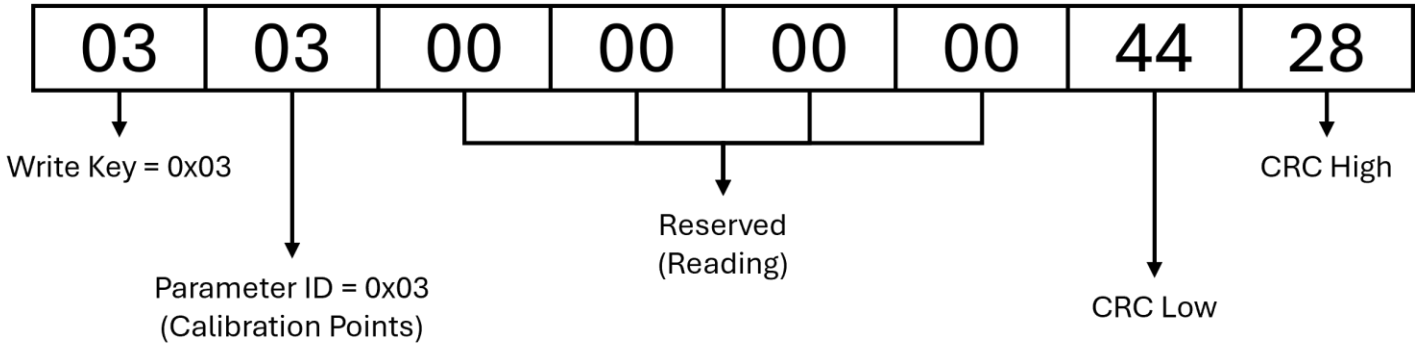

Example Return
PGN: 0xFF01 (Return)
CAN ID: 0x18FF0180 (Priority 6, SA = 0x80)
Parameter ID: 0x02 (Offset)
Value: -100 → 0xFFFFFF9C

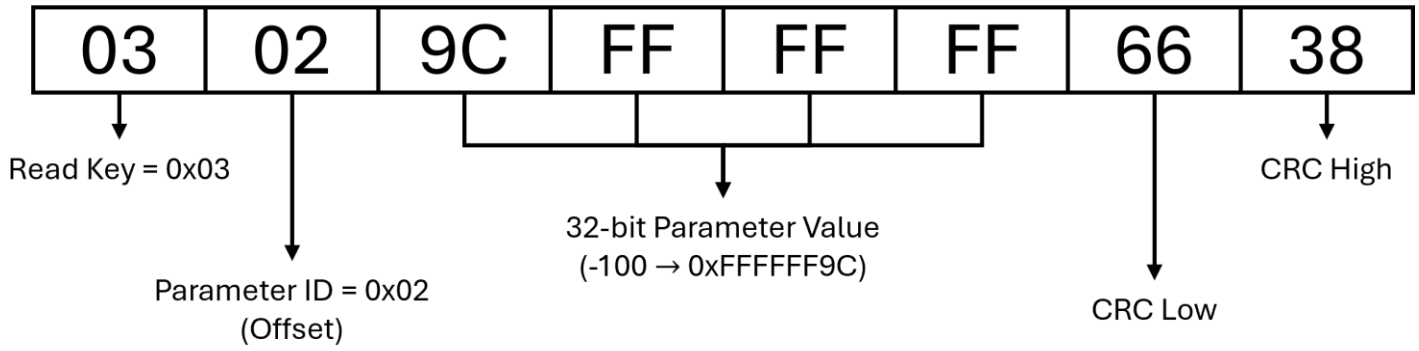

Example Broadcast
PGN: 0xFF3F (Broadcast)
CAN ID: 0x18FF3F80 (Priority 6, SA = 0x80)
Value: 1000→0x000003E8

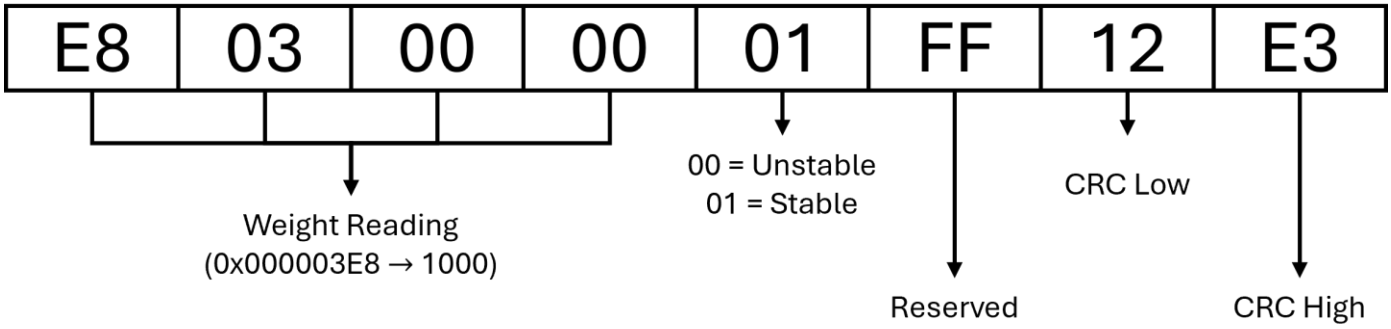

6. Operation

- The amplifier is not IP rated and must be kept away from water or debris ingress as these can significantly affect the output or render the amplifier inoperable. An enclosure is strongly recommended.
- For the most stable amplifier readouts, a stable and reliable DC power supply should be used.
- The load cell cable should be run through areas free of electrical and magnetic fields as the load cell must be able to transmit signal differences of a few μV to the amplifier these fields can induce interference voltages.

7. Technical Specifications

7.1 Drawings & Dimensions

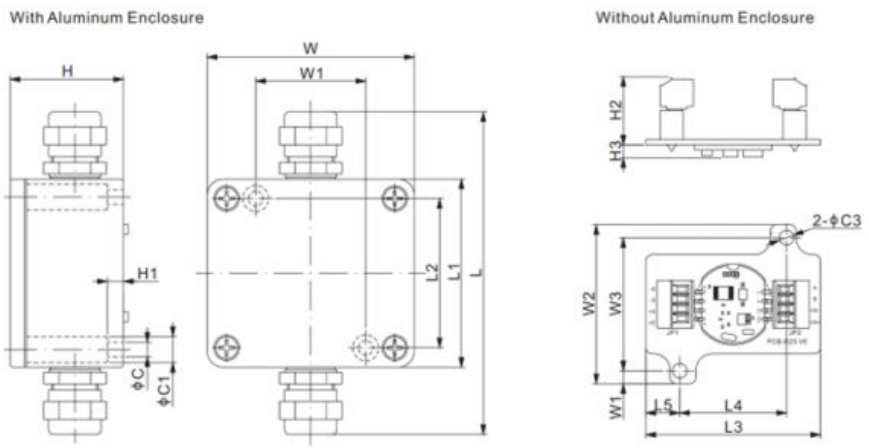

DIMENSIONS

	C	C1	H	H1	L	L1	L2	W	W1	C3	H2	H3	L3	L4	L5	W2	W3	W4
inches	0.18	0.33	1.38	0.20	3.94	2.28	1.81	2.52	1.34	0.18	0.83	0.16	2.13	1.30	0.41	1.93	1.61	0.16
mm	4.5	8.5	35.0	5.0	100.0	58.0	46.0	64.0	34.0	4.5	21.0	4.0	54.0	33.0	10.5	49.0	41.0	4.0

Figure 7-1. Chip Dimensions (With and Without Enclosure)

7.2 Specifications Table

Table 7-1: Product Specifications

Acceptable Load Cell Type	All Strain Gauge Type
Weight Approx. (g)	19
Power Supply	9~24VDC
Working Temperature	-20°C to +60°C
Output Signal	CAN
Output Protocol	CANJ1939
Non-Linearity	<0.1%
Accuracy	<0.3% (over full temperature range)
Input Range	0.5-3.9mV/V
Power Consumption	0.36W @ 12V
Load Cell Excitation Voltage	5V

Important

Specifications are subject to change *without* notice. Users are encouraged to refer to our website or confirm with our team any details, questions, or concerns.

Please Contact Our Authorized Dealer for Technical Assistance:

Notes:

V1.0.0
PN-250909

1-855-269-5623
www.anyload.com

ISO 9001 ISO 14001:2015 ISO 45001:2018

© 2026 Anyload Weigh & Measure Inc.
Specifications subject to change without notice.

ANYLOAD®